Independent Validation of ZT-1a's Neuroprotective Effects: A Comparative Guide

Author: BenchChem Technical Support Team. **Date**: April 2026

Compound of Interest

Compound Name:	*ZT-1a*
CAS No.:	*212135-62-1*
Cat. No.:	*B3349256*

Get Quote

An objective analysis of the SPAK inhibitor **ZT-1a**'s performance in preclinical models of neurological disorders, with a focus on experimental data and mechanistic pathways.

This guide provides a comprehensive comparison of the neuroprotective effects of **ZT-1a**, a novel and selective SPAK kinase inhibitor, with its derivatives. The information is intended for researchers, scientists, and professionals in drug development, offering a detailed look at the quantitative data from preclinical studies, the experimental protocols used, and the underlying signaling pathways.

Mechanism of Action

ZT-1a exerts its neuroprotective effects by modulating cation-Cl- cotransporters (CCCs) in the brain through the inhibition of STE20/SPS1-related proline/alanine-rich kinase (SPAK).[1] Under pathological conditions such as ischemic stroke, the WNK-SPAK/OSR1 signaling pathway is upregulated, leading to increased phosphorylation and activation of Na+-K+-2Cl- cotransporter isoform 1 (NKCC1) and inhibition of K+-Cl- cotransporters (KCCs).[1][2] This dysregulation results in ionic imbalance, cytotoxic edema, and neuronal cell death.[2] **ZT-1a**, by

© 2026 BenchChem. All rights reserved.

inhibiting SPAK, prevents the phosphorylation of NKCC1 and stimulates KCC activity, thereby restoring ionic homeostasis and protecting brain tissue.[1]

Signaling Pathway of **ZT-1a**'s Neuroprotective Action

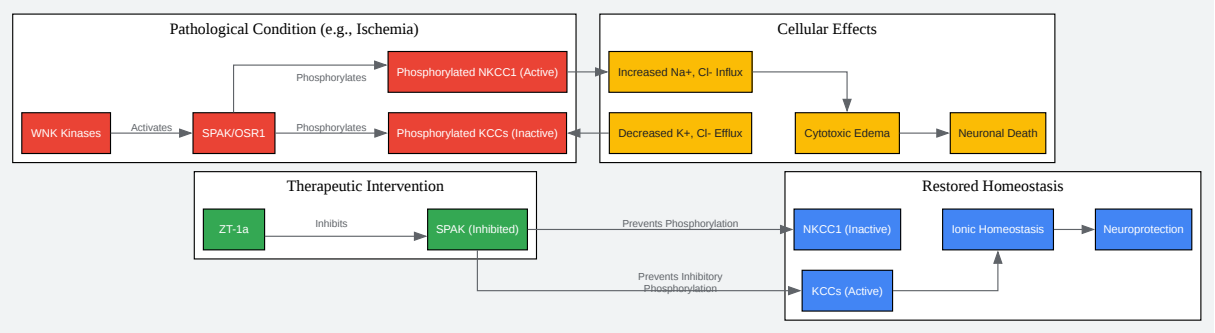

Click to download full resolution via product page

Caption: **ZT-1a** inhibits the WNK-SPAK/OSR1 pathway, preventing NKCC1 activation and promoting KCC activity to restore ionic balance and confer neuroprotection.

Quantitative Comparison of ZT-1a and Its Derivatives

The neuroprotective efficacy of **ZT-1a** and several of its derivatives has been evaluated in a mouse model of ischemic stroke. The following tables summarize the key findings from these studies.

Table 1: Reduction in Infarct Volume and Cerebral Swelling

© 2026 BenchChem. All rights reserved.

Compound	Dose	Administration Route	Reduction in Infarct Volume (%)	Reduction in Cerebral Swelling (%)	Reference
ZT-1a	5 mg/kg	Intraperitoneal	~44%	~36-54%	
ZT-1a	Osmotic Pump	52.0%	Not Reported		
ZT-1c	Osmotic Pump	38.1%	Not Reported		
ZT-1d	Osmotic Pump	39.4%	Not Reported		
ZT-1g	Osmotic Pump	Not Statistically Significant	Not Reported		
ZT-1h	Osmotic Pump	Not Statistically Significant	Not Reported		

Table 2: Improvement in Neurological Deficits

Compound	Administration	Observation Period	Neurological Score Improvement	Reference
ZT-1a and derivatives	Osmotic Pump	Days 3-7 post-stroke	Significantly lower neurological deficits compared to vehicle	
ZT-1a, ZT-1c, ZT-1d	Osmotic Pump	Days 3-7 post-stroke	Greater impact than ZT-1g and ZT-1h	

© 2026 BenchChem. All rights reserved.

Experimental Methodologies

The following section details the experimental protocols employed in the validation of **ZT-1a**'s neuroprotective effects.

Ischemic Stroke Model (Transient Middle Cerebral Artery Occlusion - tMCAO)

A common model to simulate ischemic stroke in rodents involves the temporary occlusion of the middle cerebral artery.

- Animal Model: Adult C57BL/6J mice are typically used.
- Surgical Procedure: Anesthesia is induced, and the external carotid artery is ligated. A filament is inserted through the internal carotid artery to block the origin of the middle cerebral artery.
- Occlusion and Reperfusion: The filament is left in place for a defined period (e.g., 60 minutes) to induce ischemia. It is then withdrawn to allow for reperfusion of the blood vessel.
- Drug Administration: **ZT-1a** or its derivatives are administered at specific time points post-reperfusion, either via intraperitoneal injection or continuous delivery through an osmotic pump.
- Outcome Measures:
  - Infarct Volume: Assessed 24 hours or later post-stroke using techniques like 2,3,5-triphenyltetrazolium chloride (TTC) staining or magnetic resonance imaging (MRI).
  - Cerebral Edema: Measured by comparing the hemispheric volumes of the ipsilateral (ischemic) and contralateral hemispheres.
  - Neurological Deficits: Evaluated using standardized scoring systems that assess motor and sensory function at various time points post-stroke.

Experimental Workflow for Preclinical Validation of **ZT-1a**

© 2026 BenchChem. All rights reserved.

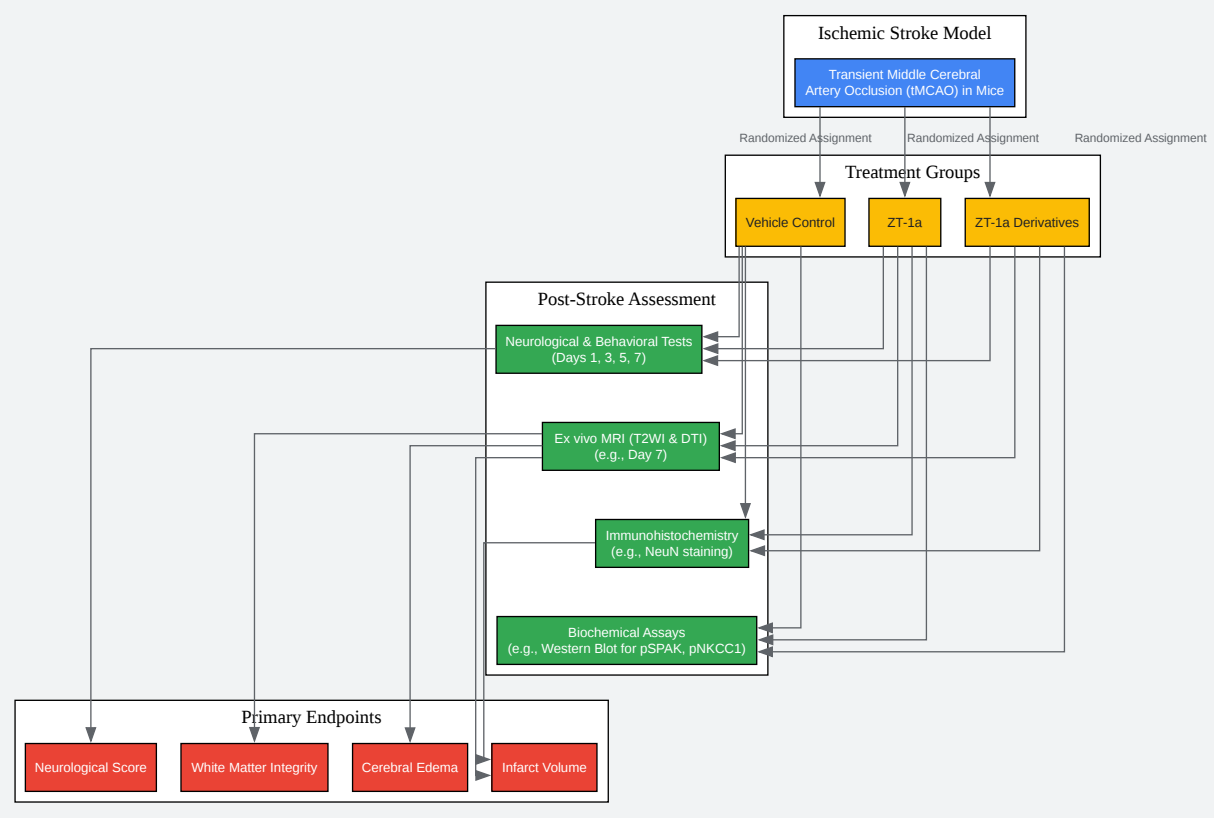

Click to download full resolution via product page

© 2026 BenchChem. All rights reserved.

Caption: Workflow for evaluating the neuroprotective effects of **ZT-1a** and its derivatives in a mouse model of ischemic stroke.

Immunohistochemistry and Western Blotting

These techniques are used to assess the molecular changes in the brain tissue following ischemia and treatment.

- Immunohistochemistry: Brain sections are stained with antibodies against specific proteins, such as NeuN (a neuronal marker), to visualize and quantify neuronal loss in the infarct region.

- Western Blotting: Protein extracts from brain tissue are separated by size and probed with antibodies to detect the levels of total and phosphorylated proteins in the WNK-SPAK-NKCC1 pathway (e.g., pSPAK, pNKCC1). This allows for the direct assessment of **ZT-1a**'s target engagement.

Summary and Future Directions

The available preclinical data strongly support the neuroprotective effects of **ZT-1a** in models of ischemic stroke. It effectively reduces infarct volume, cerebral edema, and improves neurological outcomes. The mechanism of action, through inhibition of the SPAK kinase, is well-defined. Comparative studies with its derivatives indicate that while several compounds show efficacy, **ZT-1a** remains the most potent in the tested models.

For future research, direct, head-to-head comparative studies of **ZT-1a** with other classes of neuroprotective agents would be highly valuable. Additionally, further investigation into its efficacy in other models of neurological disorders and its pharmacokinetic and safety profiles will be crucial for its potential clinical translation. The consistent positive results in preclinical models, however, position **ZT-1a** as a promising therapeutic candidate for conditions involving impaired ionic homeostasis in the brain.

Need Custom Synthesis?

BenchChem offers custom synthesis for rare earth carbides and specific isotopiclabeling.

Email: info@benchchem.com or Request Quote Online.

References

- 1. researchgate.net [researchgate.net]
- 2. SPAK inhibitor ZT-1a for ischemic stroke therapy - Dandan Sun [grantome.com]
- To cite this document: BenchChem. [Independent Validation of ZT-1a's Neuroprotective Effects: A Comparative Guide]. BenchChem, [2026]. [Online PDF]. Available at: [https://www.benchchem.com/product/b3349256/docs#independent-validation-of-zt-1a-s-neuroprotective-effects-a-comparative-guide]

Disclaimer & Data Validity:

The information provided in this document is for Research Use Only (RUO) and is strictly not intended for diagnostic or therapeutic procedures. While BenchChem strives to provide accurate protocols, we make no warranties, express or implied, regarding the fitness of this product for every specific experimental setup.

Technical Support: The protocols provided are for reference purposes. Unsure if this reagent suits your experiment?

Need Industrial/Bulk Grade? Request Custom Synthesis Quote

BenchChem

Our mission is to be the trusted global source of essential and advanced chemicals, empowering scientists and researchers to drive progress in science and industry.

Contact

Address: 3281 E Guasti Rd

Ontario, CA 91761, United States

Phone: (601) 213-4426

Email: info@benchchem.com

Contact our Ph.D. Support Team for a compatibility check

© 2026 BenchChem. All rights reserved.