Reproducibility of electro-optical switching in phenylcyclohexane mixtures

Author: BenchChem Technical Support Team. **Date**: April 2026

Compound of Interest

Compound Name:	*1-Pentyl-4-(trans-4-propylcyclohexyl)benzene*
CAS No.:	*89363-50-8*
Cat. No.:	*B3344706*

Get Quote

Title: Reproducibility of Electro-Optical Switching in Phenylcyclohexane Mixtures: A Comparative Guide for LC-Based Biosensing

Executive Summary In the landscape of drug development and biomolecular screening, liquid crystal (LC)-based optical biosensors have emerged as powerful label-free detection platforms[1]. These sensors rely on the extreme sensitivity of the LC director to interfacial phenomena—such as protein-ligand binding or enzymatic cleavage—which triggers a macroscopic electro-optical switching event[2]. However, the translational success of these high-throughput platforms hinges entirely on the reproducibility of the electro-optical response.

Historically, cyanobiphenyls (CBs), particularly 4-cyano-4'-pentylbiphenyl (5CB), have been the default nematic LCs used in these assays, often colloquially termed the "fruit flies" of liquid crystal research[3]. While excellent for proof-of-concept studies, 5CB suffers from inherent chemical and photolytic instabilities that compromise long-term assay reproducibility. This guide objectively compares standard cyanobiphenyls against phenylcyclohexane (PCH) mixtures, detailing the mechanistic causality behind PCH's superior electro-optical reproducibility and providing self-validating protocols for drug screening applications.

© 2026 BenchChem. All rights reserved.

Mechanistic Causality: Why PCH Outperforms Cyanobiphenyls

The core structural difference between CBs and PCHs lies in the replacement of one benzene ring in the biphenyl core with a trans-1,4-substituted cyclohexane ring[4]. This seemingly simple aliphatic substitution fundamentally alters the physical and electro-optical properties of the mesogen[5]:

- Elimination of Extended π -Conjugation (UV/Oxidative Stability): The fully conjugated biphenyl system in 5CB strongly absorbs ultraviolet (UV) light, making it highly susceptible to photolytic degradation and oxidative breakdown during prolonged exposure to the intense illumination required for polarizing optical microscopy (POM). This degradation produces ionic impurities that alter the threshold voltage (Vth) and dielectric anisotropy ($\Delta\epsilon$), leading to baseline drift and poor run-to-run reproducibility. PCH mixtures, lacking this extended conjugation, exhibit exceptional UV stability, ensuring that the electro-optical switching threshold remains constant over thousands of assay cycles.

- Reduction in Rotational Viscosity (γ1): The aliphatic cyclohexane ring reduces intermolecular π−π stacking interactions, significantly lowering the rotational viscosity of PCH mixtures compared to CBs[5]. Lower viscosity translates to faster, more uniform director reorientation kinetics. In a biosensor, this means the transition from a homeotropic (dark) to a planar (bright) state occurs with a sharper, more reproducible temporal profile.

- Optimized Birefringence (Δn): PCH molecules possess a lower optical anisotropy ($\Delta n \approx 0.10-0.12$) compared to 5CB ($\Delta n \approx 0.18$)[5]. In thin-film biosensing (e.g., within a TEM grid), excessively high birefringence can cause optical noise and multi-order interference colors that complicate automated image analysis. The moderate birefringence of PCH yields a clean, first-order optical transition, enhancing the signal-to-noise ratio for quantitative readout.

© 2026 BenchChem. All rights reserved.

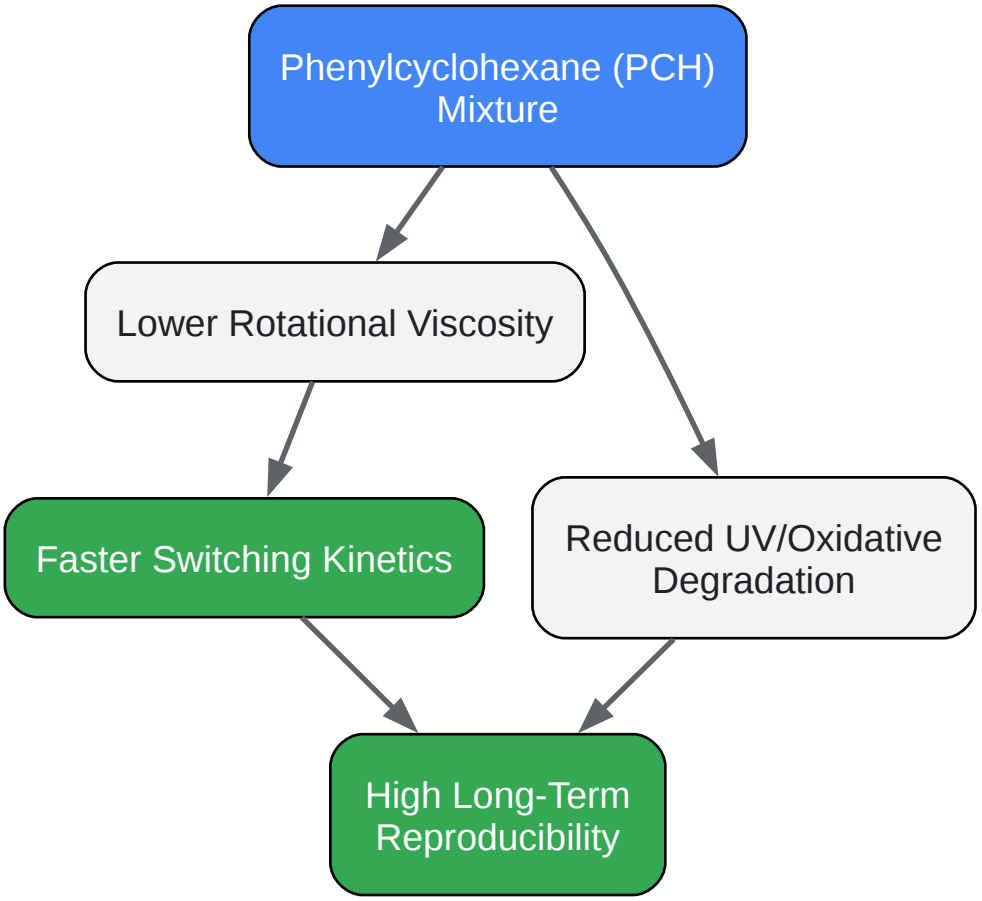

Click to download full resolution via product page

Fig 1. Causality of PCH mixture properties driving electro-optical reproducibility.

Comparative Performance Data

The following table synthesizes the quantitative differences between a standard cyanobiphenyl (5CB) and a representative phenylcyclohexane mixture (e.g., PCH5/PCH7 blends) relevant to biosensor performance.

© 2026 BenchChem. All rights reserved.

Parameter	Cyanobiphenyl (5CB)	Phenylcyclohexane (PCH) Mixture	Impact on Biosensor Performance
Core Structure	Biphenyl (Fully conjugated)	Phenylcyclohexane (Aliphatic/Aromatic)	Dictates chemical stability and intermolecular forces[4].
Rotational Viscosity (γ1at 20°C)	~ 60 - 70 mPa·s	~ 20 - 30 mPa·s	PCH enables faster, more uniform signal generation[5].
Birefringence (Δn)	~ 0.18	~ 0.11	PCH reduces optical interference noise in thin films[5].
Photostability (UV Exposure)	Degrades rapidly (Baseline drift)	Highly stable (> 10x lifetime of 5CB)	PCH ensures Vth consistency across extended screening campaigns.
Switching Reproducibility (CV%)	8 - 12% (High variance over time)	< 3% (Highly consistent)	PCH minimizes false positives/negatives in drug screening.

Self-Validating Experimental Protocol: LC Biosensor Fabrication & Assay

To harness the reproducibility of PCH mixtures, the sensor architecture itself must be rigorously controlled. The following protocol outlines the fabrication of a TEM-grid-supported LC biosensor[1], incorporating internal validation steps to guarantee that any observed electro-optical switching is strictly causal to the biomolecular target.

Phase 1: Substrate Functionalization and Grid Assembly

- Glass Cleaning: Sonicate glass slides in Alconox, ethanol, and ultra-pure water (10 min each).

© 2026 BenchChem. All rights reserved.

- Causality: Removes organic contaminants that could induce spurious heterogeneous LC alignment.

- Silanization (Alignment Layer): Immerse slides in a 1% v/v solution of octadecyltrichlorosilane (OTS) in heptane for 30 minutes. Rinse with methylene chloride and dry under N2.

  - Causality: OTS forms a self-assembled monolayer (SAM) that forces the LC molecules into a strict homeotropic (perpendicular) alignment[2].

- Grid Placement: Place a gold transmission electron microscopy (TEM) grid (e.g., 20 µm thickness, 283 µm grid spacing) onto the OTS-treated glass[1].

- LC Infusion: Dispense 1 µL of the PCH mixture onto the grid. Capillary action will draw the LC into the grid squares. Remove excess LC with a micro-syringe.

Phase 2: Self-Validation of the Baseline State 5. Optical Validation: Observe the grid under a Polarizing Optical Microscope (POM) with crossed polarizers.

- Acceptance Criteria: The grid squares must appear completely dark (homeotropic alignment).
- Self-Validation Logic: If light transmission is observed, the OTS layer is defective or the PCH mixture is contaminated. Discard the slide. This ensures the baseline is absolute zero before any drug target is introduced.

Phase 3: Biomolecular Assay and Electro-Optical Readout 6. Aqueous Interface Formation: Carefully overlay the LC-filled grid with 100 µL of the biological buffer (e.g., PBS) containing the target receptor (e.g., a lipid-anchored protein). 7. Target Introduction: Spike the aqueous phase with the drug candidate. 8. Signal Acquisition: Monitor the optical transmission. Binding of the drug to the receptor disrupts the delicate interfacial energy balance, triggering the PCH mixture to switch from homeotropic (dark) to planar (bright)[2]. 9. Quantification: Use image analysis software to calculate the average grayscale intensity. The low viscosity of PCH ensures that this transition reaches steady-state rapidly, allowing for precise kinetic measurements.

© 2026 BenchChem. All rights reserved.

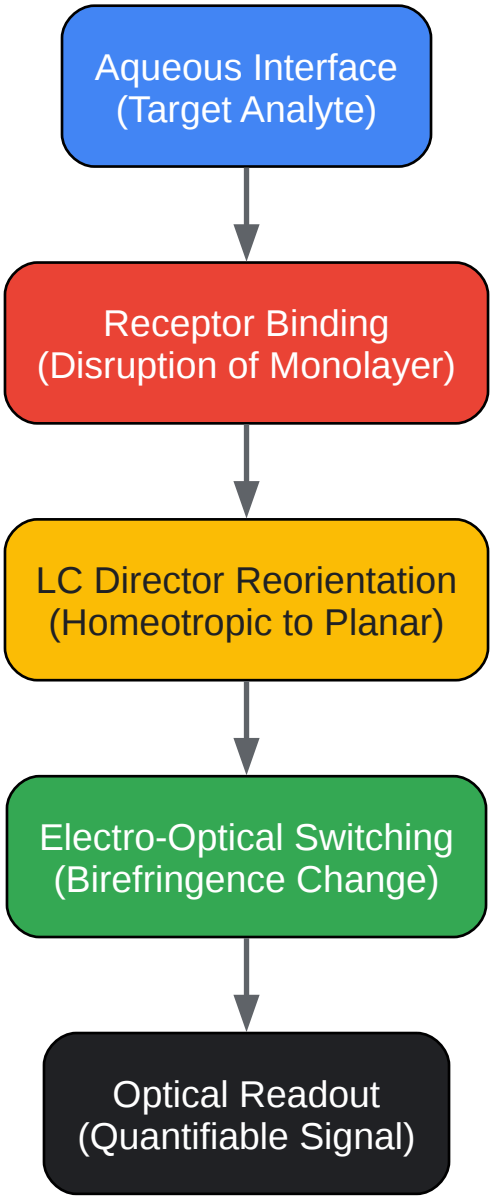

Click to download full resolution via product page

Fig 2. Mechanistic pathway of target-induced electro-optical switching in LC biosensors.

Conclusion

For drug development professionals utilizing liquid crystal-based screening platforms, the transition from legacy cyanobiphenyls to phenylcyclohexane mixtures is not merely an incremental upgrade—it is a prerequisite for assay reliability. By eliminating the conjugated biphenyl core, PCH mixtures eradicate the photolytic instability and high rotational viscosity that plague 5CB[3][5]. When paired with a rigorously self-validating protocol, PCH-based sensors

© 2026 BenchChem. All rights reserved.

deliver the high-fidelity, reproducible electro-optical switching required for quantitative biomolecular analysis.

References

- State-of-the-Art Development in Liquid Crystal Biochemical Sensors.MDPI Sensors.
- The good, the bad and the ugly faces of cyanobiphenyl mesogens in selected tracks of fundamental and applied liquid crystal research.PMC Liquid Crystals Reviews.
- Liquid Crystal Compounds Incorporating the Trans-1,4-Substituted Cyclohexane Ring System.Taylor & Francis Molecular Crystals and Liquid Crystals.
- LIQUID CRYSTAL MATERIALS AND LIQUID CRYSTAL DISPLAYS.Annual Reviews of Materials Science.
- IMPROVING LIQUID CRYSTAL-BASED BIOSENSING IN AQUEOUS PHASES.PMC Sensors and Actuators B: Chemical.

Need Custom Synthesis?

BenchChem offers custom synthesis for rare earth carbides and specific isotopiclabeling.

Email: info@benchchem.com or Request Quote Online.

Sources

- 1. mdpi.com [mdpi.com]
- 2. IMPROVING LIQUID CRYSTAL-BASED BIOSENSING IN AQUEOUS PHASES - PMC [pmc.ncbi.nlm.nih.gov]
- 3. The good, the bad and the ugly faces of cyanobiphenyl mesogens in selected tracks of fundamental and applied liquid crystal research - PMC [pmc.ncbi.nlm.nih.gov]
- 4. tandfonline.com [tandfonline.com]
- 5. annualreviews.org [annualreviews.org]
- To cite this document: BenchChem. [Reproducibility of electro-optical switching in phenylcyclohexane mixtures]. BenchChem, [2026]. [Online PDF]. Available at: [https://www.benchchem.com/product/b3344706/docs#reproducibility-of-electro-optical-switching-in-phenylcyclohexane-mixtures]

Disclaimer & Data Validity:

The information provided in this document is for Research Use Only (RUO) and is strictly not intended for diagnostic or therapeutic procedures. While BenchChem strives to provide accurate protocols, we make no warranties, express or implied, regarding the fitness of this product for every specific experimental setup.

Technical Support: The protocols provided are for reference purposes. Unsure if this reagent suits your experiment?

Need Industrial/Bulk Grade? Request Custom Synthesis Quote

BenchChem

Our mission is to be the trusted global source of essential and advanced chemicals, empowering scientists and researchers to drive progress in science and industry.

Contact

Address: 3281 E Guasti Rd

Ontario, CA 91761, United States

Phone: (601) 213-4426

Email: info@benchchem.com

Contact our Ph.D. Support Team for a compatibility check

© 2026 BenchChem. All rights reserved.