The Synthesis of PEG-Based PROTAC Linkers: A Technical Guide

Author: BenchChem Technical Support Team. **Date**: April 2026

Compound of Interest

Compound Name:	*m-PEG3-S-PEG3-Boc*
CAS No.:	*2055040-96-3*
Cat. No.:	*B3325112*

Get Quote

For Researchers, Scientists, and Drug Development Professionals

Introduction: The Critical Role of Linkers in PROTAC Design

Proteolysis Targeting Chimeras (PROTACs) have emerged as a revolutionary therapeutic modality, capable of hijacking the cell's own ubiquitin-proteasome system to selectively eliminate disease-causing proteins.[1] These heterobifunctional molecules consist of three essential components: a ligand that binds the target Protein of Interest (POI), a second ligand that recruits an E3 ubiquitin ligase, and a chemical linker that connects the two.[2] The linker is not merely a spacer; it is a critical determinant of a PROTAC's efficacy, influencing the formation and stability of the crucial POI-PROTAC-E3 ligase ternary complex required for protein degradation.[1]

Among the various linker types, polyethylene glycol (PEG) linkers have become a cornerstone of PROTAC design.[2] The repeating ethylene glycol units impart hydrophilicity, which can enhance the solubility and cell permeability of the often large and lipophilic PROTAC molecules.[2][3] Furthermore, the length and flexibility of the PEG chain are key parameters

© 2026 BenchChem. All rights reserved.

that can be systematically tuned to optimize the geometry of the ternary complex, thereby maximizing degradation efficiency.[3][4] This guide provides an in-depth overview of the chemical synthesis of PEG-based PROTAC linkers, complete with detailed experimental protocols, quantitative data, and process visualizations.

Core Synthetic Strategies for PEGylated PROTACs

The synthesis of PEG-based PROTACs is a modular process, typically involving the sequential conjugation of the POI and E3 ligase ligands to a bifunctional PEG linker.[4] The choice of synthetic route depends on the functional groups available on the ligands and the desired linker chemistry. The most prevalent strategies involve amide bond formation and "click chemistry".[2][5]

- Amide Coupling: This is a robust and widely used method for connecting ligands that contain amine or carboxylic acid functionalities. Bifunctional PEG linkers, such as amine-PEG-carboxylic acid (NH2-PEGn-COOH) or hydroxy-PEG-carboxylic acid (HO-PEGn-COOH), are common starting points.[1][2] Standard peptide coupling reagents are used to form stable amide bonds.

- Click Chemistry: The copper(I)-catalyzed azide-alkyne cycloaddition (CuAAC) is another powerful strategy that offers high efficiency and orthogonality.[5][6] This approach allows for the rapid assembly of PROTAC libraries by coupling an azide-functionalized component with an alkyne-functionalized one.[7][8] Bifunctional PEG linkers containing, for example, an azide at one terminus and an NHS ester at the other are commercially available for this purpose.[2]

Visualizing the PROTAC Mechanism and Synthesis

To better understand the context of linker synthesis, the following diagrams illustrate the PROTAC mechanism of action and the general synthetic workflows.

© 2026 BenchChem. All rights reserved.

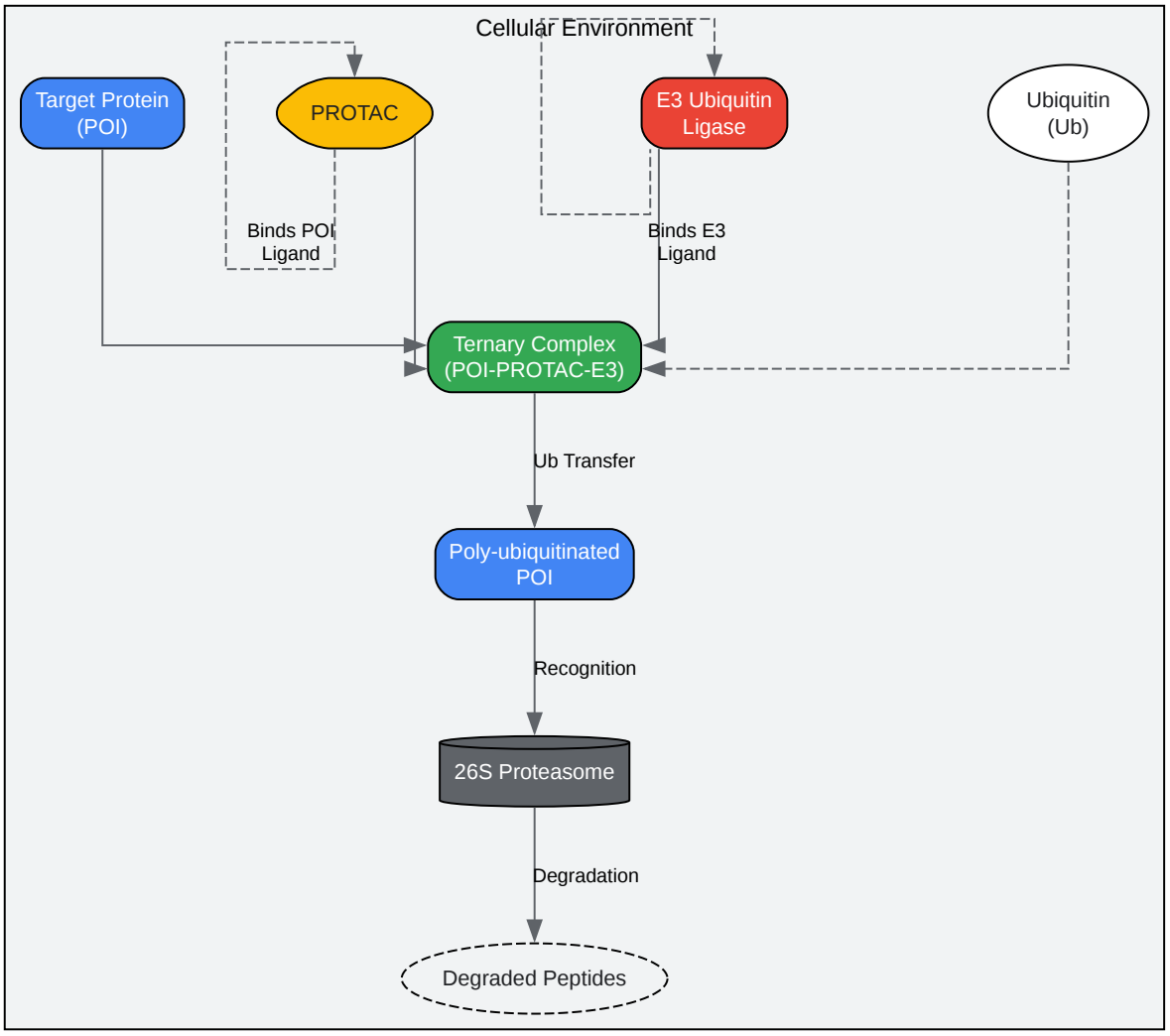

Click to download full resolution via product page

PROTAC-mediated protein degradation pathway.

© 2026 BenchChem. All rights reserved.

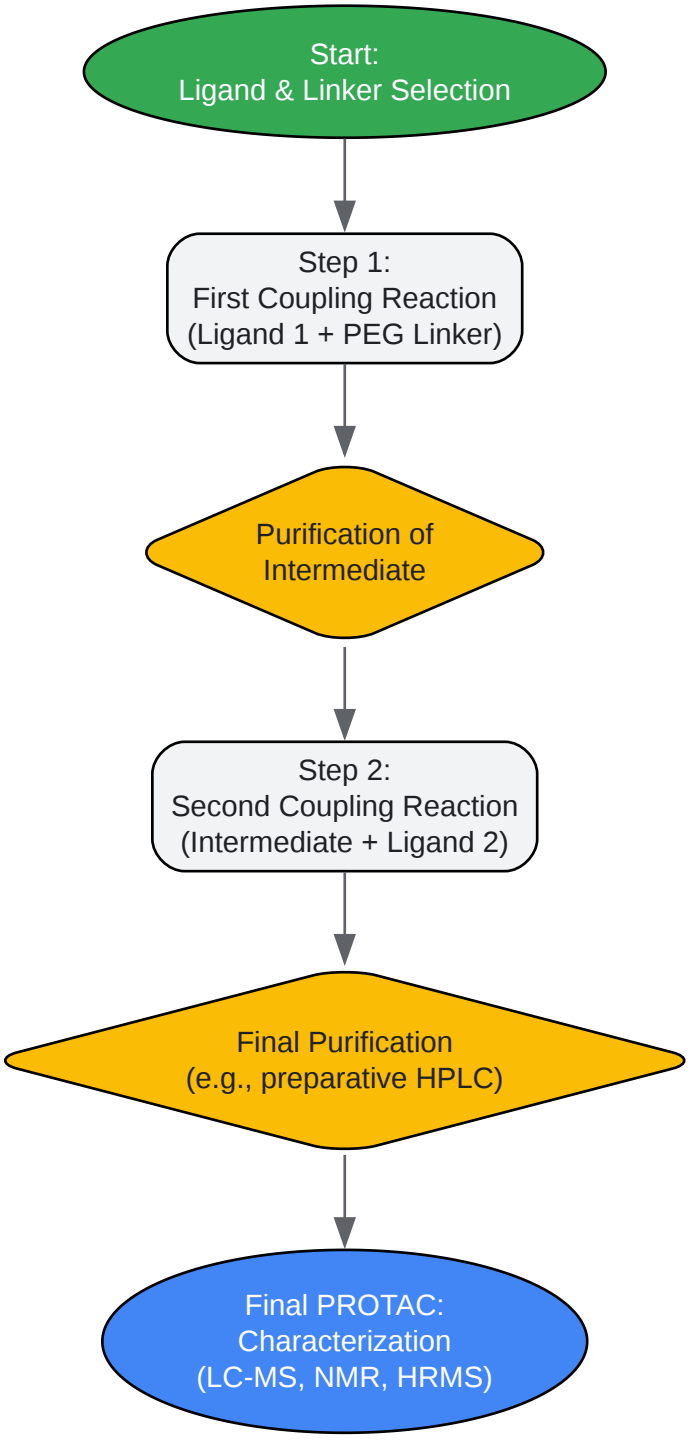

Click to download full resolution via product page

A typical workflow for the design and evaluation of PROTACs.

Quantitative Data Summary

© 2026 BenchChem. All rights reserved.

The selection of appropriate starting materials and reagents is crucial for successful synthesis. The following tables summarize common linkers, reagents, and illustrative data.

Table 1: Representative Bifunctional PEG Linkers for PROTAC Synthesis

Linker Name	Structure	Typical Application
Hydroxy-PEGn-acid	HO-(CH_2CH_2O)n-X-COOH	Sequential amide coupling
Amino-PEGn-acid	H_2N-(CH_2CH_2O)n-X-COOH	Sequential amide coupling
Azide-PEGn-NHS ester	N_3-(CH_2CH_2O)n-X-CO-NHS	Click chemistry followed by amide coupling
Alkyne-PEGn-acid	HC≡C-X-(OCH_2CH_2)n-Y-COOH	Click chemistry and amide coupling
Boc-NH-PEGn-COOH	Boc-NH-(CH_2CH_2O)n-X-COOH	Amide coupling with orthogonal protection

n represents the number of PEG units; X and Y represent short alkyl chains.

Table 2: Common Reagents for PEG-based PROTAC Synthesis

© 2026 BenchChem. All rights reserved.

Reagent	Abbreviation	Role in Synthesis
HATU	HATU	Amide coupling agent; activates carboxylic acids[1]
DIPEA	DIPEA	Non-nucleophilic base used in coupling reactions[1]
p-Toluenesulfonyl chloride	TsCl	Activates hydroxyl groups for nucleophilic substitution[1]
Copper(II) sulfate / Sodium ascorbate	$CuSO_4$ / NaAsc	Catalyst system for CuAAC "click" reaction[2]
Trifluoroacetic acid	TFA	Removes acid-labile protecting groups (e.g., Boc)
Preparative HPLC	-	High-performance liquid chromatography for final purification[1][2]

Table 3: Illustrative Characterization Data for a Final PROTAC

Analysis Technique	Expected Result	Purpose
LC-MS	Single major peak with correct m/z	Confirm reaction completion and determine molecular weight
^{1}H and ^{13}C NMR	Peaks corresponding to all three components (POI ligand, PEG linker, E3 ligand)	Confirm the structure of the final compound[1]
HRMS	Accurate mass measurement matching the calculated molecular formula	Confirm elemental composition[1]

Table 4: Illustrative Impact of PEG Linker Length on PROTAC Efficacy

© 2026 BenchChem. All rights reserved.

PROTAC	Linker Composition	DC_{50} (nM)	D_{max} (%)
PROTAC A	Alkyl Chain	>1000	<20
PROTAC B	PEG-2	500	55
PROTAC C	PEG-4	250	70
PROTAC D	PEG-8	400	60

Data is illustrative and compiled from literature sources.[2] DC_{50} (concentration for 50% degradation) and D_{max} (maximum degradation) are cell-line dependent and must be determined empirically.

Detailed Experimental Protocols

This section provides representative protocols for the two primary synthetic strategies.

Protocol 1: Synthesis via Sequential Amide Coupling

This protocol describes the synthesis of a PROTAC using a Hydroxy-PEGn-acid linker, coupling an amine-functionalized POI ligand first, followed by an amine-containing E3 ligase ligand.

© 2026 BenchChem. All rights reserved.

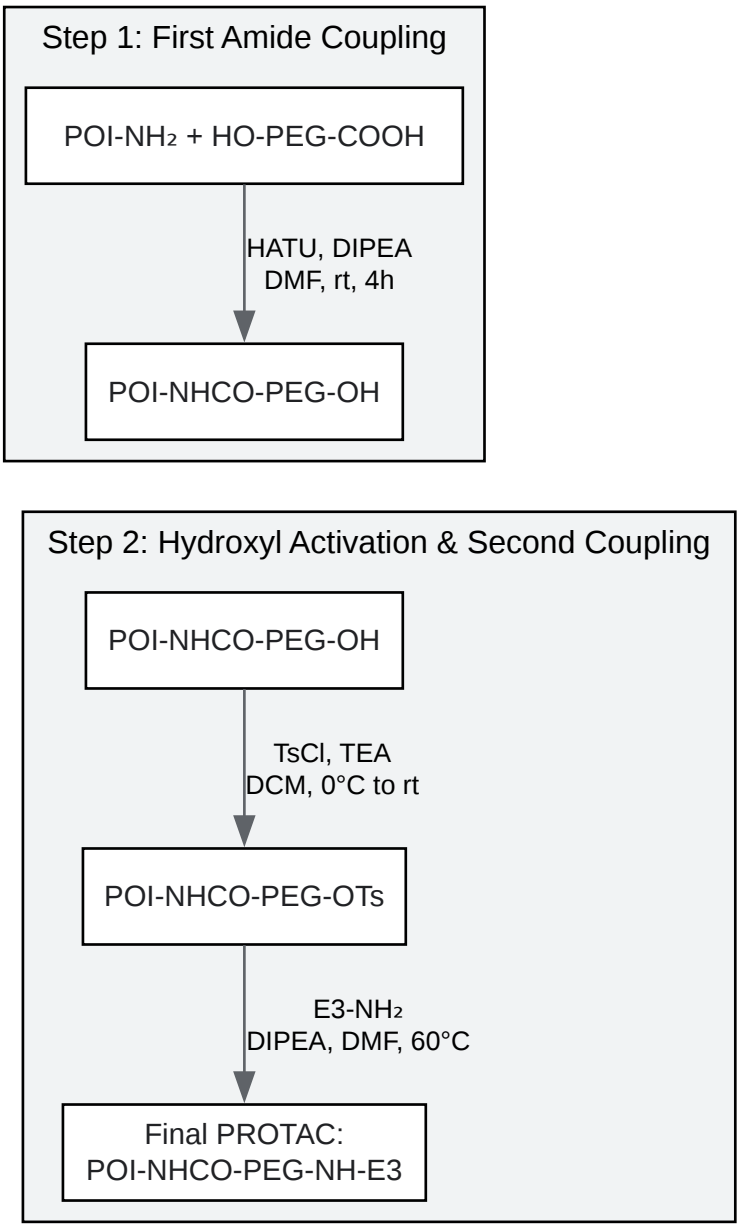

Click to download full resolution via product page

Synthetic route via sequential amide coupling.

Step 1: Synthesis of POI-Linker Intermediate (POI-PEG-OH)

- Materials:
  - Amine-functionalized POI ligand (POI-NH_2)

© 2026 BenchChem. All rights reserved.

- Hydroxy-PEGn-acid (1.2 equivalents)
- HATU (1.2 equivalents)
- DIPEA (3.0 equivalents)
- Anhydrous Dimethylformamide (DMF)
- Ethyl acetate, Saturated aq. $NaHCO_3$, Water, Brine
- Anhydrous Na_2SO_4, Silica gel[1]

- Procedure:
  - Dissolve the Hydroxy-PEGn-acid in anhydrous DMF. Add HATU and DIPEA and stir the mixture at room temperature for 15 minutes to activate the carboxylic acid.[1]
  - Add a solution of the POI-NH_2 (1.0 equivalent) in anhydrous DMF to the reaction mixture.[1]
  - Stir the reaction at room temperature for 4 hours under a nitrogen atmosphere, monitoring progress by LC-MS.[1]
  - Upon completion, dilute the reaction with ethyl acetate and perform sequential washes with saturated aqueous $NaHCO_3$, water, and brine.[1]
  - Dry the organic layer over anhydrous Na_2SO_4, filter, and concentrate under reduced pressure.[1]
  - Purify the crude product by flash column chromatography on silica gel to yield the POI-PEGn-OH intermediate.[1]

Step 2: Synthesis of the Final PROTAC

- Materials:
  - POI-PEGn-OH intermediate (from Step 1)
  - p-Toluenesulfonyl chloride (TsCl) (1.2 equivalents)

© 2026 BenchChem. All rights reserved.

- Triethylamine (TEA) (1.5 equivalents)
- Amine-containing E3 ligase ligand (E3-NH_2) (1.1 equivalents)
- Anhydrous Dichloromethane (DCM), Anhydrous DMF, DIPEA
- Preparative HPLC system[1]

- Procedure:
  - Dissolve the POI-PEGn-OH intermediate (1.0 equivalent) in anhydrous DCM, add TEA, and cool the solution to 0°C.[1]
  - Slowly add a solution of TsCl in anhydrous DCM. Allow the reaction to warm to room temperature and stir for 4-6 hours. Monitor the formation of the tosylated intermediate (POI-PEG-OTs) by LC-MS.[1]
  - Concentrate the reaction mixture under reduced pressure. The crude tosylated intermediate is often used directly in the next step.
  - Dissolve the crude intermediate and the E3-NH_2 ligand in anhydrous DMF. Add DIPEA (3.0 equivalents).[1]
  - Stir the reaction at 60°C overnight under a nitrogen atmosphere, monitoring by LC-MS.[1]
  - Upon completion, purify the final PROTAC directly from the reaction mixture using preparative HPLC.[1]

Protocol 2: Synthesis via Click Chemistry

This protocol outlines a common click chemistry approach, first coupling an amine-containing E3 ligase ligand to an Azide-PEGn-NHS ester linker, followed by a CuAAC reaction with an alkyne-functionalized POI ligand.

© 2026 BenchChem. All rights reserved.

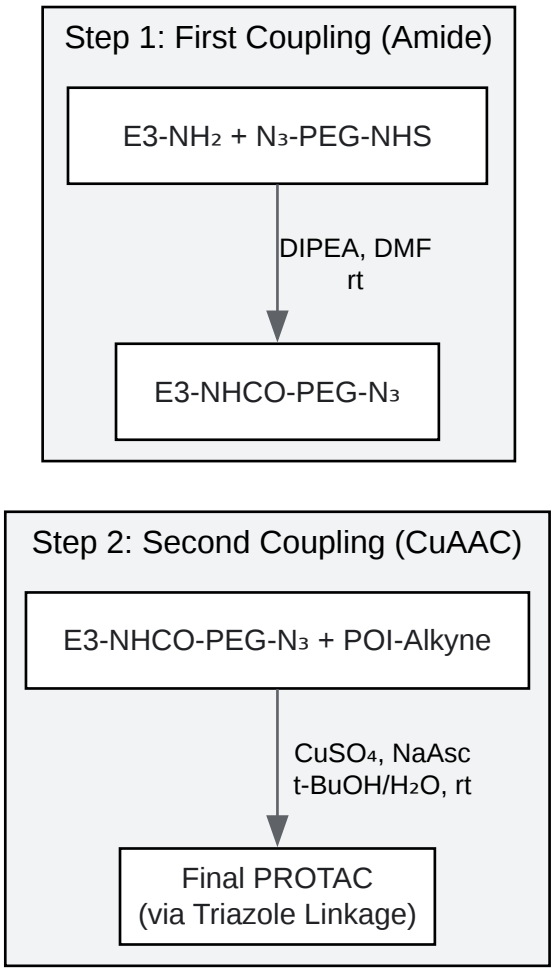

Click to download full resolution via product page

Synthetic route via click chemistry.

- Materials:
  - Amine-containing E3 ligase ligand (e.g., pomalidomide-NH_2)
  - Bifunctional Linker (e.g., Azide-PEGn-NHS ester)
  - Alkyne-functionalized POI ligand
  - DIPEA, Anhydrous DMF
  - Copper(II) sulfate, Sodium ascorbate

© 2026 BenchChem. All rights reserved.

- t-Butanol/Water solvent mixture
- Preparative HPLC system[2]

- Procedure:
  - First Coupling: Dissolve the E3 ligase ligand and the Azide-PEGn-NHS ester linker in DMF. Add DIPEA and stir at room temperature until the reaction is complete (monitor by LC-MS). Purify the E3-linker intermediate (e.g., E3-NHCO-PEGn-N_3) by preparative HPLC.[2]
  - Second Coupling (Click Reaction): Dissolve the purified E3-linker intermediate and the alkyne-functionalized POI ligand in a suitable solvent such as a t-BuOH/H_2O mixture.[2]
  - Add the copper(I) catalyst, typically generated in situ from copper(II) sulfate and a reducing agent like sodium ascorbate.[2]
  - Stir the reaction at room temperature until completion.[2]
  - Purify the final PROTAC product by preparative HPLC.

Conclusion

The chemical synthesis of PEG-based linkers is a cornerstone of modern PROTAC development. By leveraging well-established reactions like amide coupling and click chemistry, researchers can systematically synthesize and evaluate a diverse range of PROTACs. The flexibility in PEG chain length and the modular nature of the synthesis process allow for the fine-tuning of molecular properties to optimize ternary complex formation and achieve potent and selective protein degradation.[4][5] The protocols and data presented in this guide provide a foundational framework for the rational design and synthesis of next-generation PEGylated PROTACs.

Need Custom Synthesis?

BenchChem offers custom synthesis for rare earth carbides and specific isotopiclabeling.

Email: info@benchchem.com or Request Quote Online.

References

- 1. benchchem.com [benchchem.com]
- 2. benchchem.com [benchchem.com]
- 3. PEG Linkers for PROTAC Synthesis | Biopharma PEG [biochempeg.com]
- 4. Current strategies for the design of PROTAC linkers: a critical review - PMC [pmc.ncbi.nlm.nih.gov]
- 5. Novel approaches for the rational design of PROTAC linkers - PMC [pmc.ncbi.nlm.nih.gov]
- 6. benchchem.com [benchchem.com]
- 7. medchemexpress.com [medchemexpress.com]
- 8. Click chemistry in the development of PROTACs - RSC Chemical Biology (RSC Publishing) DOI:10.1039/D3CB00199G [pubs.rsc.org]

- To cite this document: BenchChem. [The Synthesis of PEG-Based PROTAC Linkers: A Technical Guide]. BenchChem, [2026]. [Online PDF]. Available at: [https://www.benchchem.com/product/b3325112/docs#the-synthesis-of-peg-based-protac-linkers-a-technical-guide]

Disclaimer & Data Validity:

The information provided in this document is for Research Use Only (RUO) and is strictly not intended for diagnostic or therapeutic procedures. While BenchChem strives to provide accurate protocols, we make no warranties, express or implied, regarding the fitness of this product for every specific experimental setup.

Technical Support: The protocols provided are for reference purposes. Unsure if this reagent suits your experiment?

Need Industrial/Bulk Grade? Request Custom Synthesis Quote

© 2026 BenchChem. All rights reserved.

BenchChem

Our mission is to be the trusted global source of essential and advanced chemicals, empowering scientists and researchers to drive progress in science and industry.

Contact

Address: 3281 E Guasti Rd

Ontario, CA 91761, United States

Phone: (601) 213-4426

Email: info@benchchem.com

Contact our Ph.D. Support Team for a compatibility check

© 2026 BenchChem. All rights reserved.