Comprehensive Analytical Characterization of 3-Methoxy-4-(2-phenylethoxy)benzaldehyde

Author: BenchChem Technical Support Team. **Date**: May 2026

Compound of Interest

Compound Name:	*3-Methoxy-4-(2-phenylethoxy)benzaldehyde*
CAS No.:	*149428-74-0*
Cat. No.:	*B326912*

Get Quote

Abstract

This application note provides a comprehensive suite of analytical methodologies for the characterization of **3-Methoxy-4-(2-phenylethoxy)benzaldehyde** (CAS: 149428-74-0), a key intermediate in synthetic organic chemistry.[1] We present detailed, field-proven protocols for chromatographic and spectroscopic techniques essential for confirming the identity, purity, and stability of this compound. The causality behind experimental choices is explained to empower researchers in adapting these methods. Protocols for High-Performance Liquid Chromatography (HPLC), Gas Chromatography-Mass Spectrometry (GC-MS), Nuclear Magnetic Resonance (NMR) Spectroscopy, and Fourier-Transform Infrared (FTIR) Spectroscopy are detailed, providing a self-validating framework for quality control and research applications.

Introduction and Compound Overview

3-Methoxy-4-(2-phenylethoxy)benzaldehyde is an aromatic aldehyde featuring a vanillin core structure functionalized with a phenylethoxy ether linkage. This structural motif makes it a

© 2026 BenchChem. All rights reserved.

valuable building block in the synthesis of more complex molecules, including potential pharmaceutical agents and fine chemicals. Given its role as a synthetic intermediate, rigorous analytical characterization is paramount to ensure the quality, consistency, and safety of downstream products.

This guide establishes an integrated analytical workflow to provide a complete profile of the compound, addressing identity, structure, purity, and potential impurities.

Compound Properties:

Property	Value	Source
CAS Number	149428-74-0	[1]
Molecular Formula	$C_{16}H_{16}O_3$	[1]
Molecular Weight	256.30 g/mol	[1]
Appearance	Off-white to pale yellow solid (predicted)	General knowledge
IUPAC Name	3-methoxy-4-(2-phenylethoxy)benzaldehyde	General knowledge

Synthesis Context and Impurity Profiling

A robust analytical strategy must account for potential impurities arising from the synthetic route. The most common synthesis for this class of compounds is the Williamson ether synthesis, reacting vanillin (3-methoxy-4-hydroxybenzaldehyde) with a 2-phenylethyl halide under basic conditions.

© 2026 BenchChem. All rights reserved.

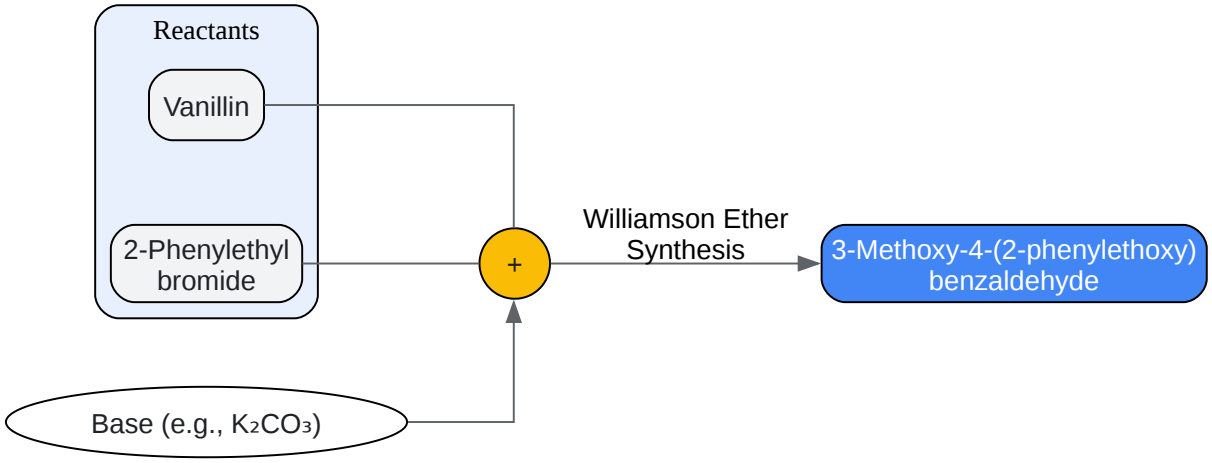

Click to download full resolution via product page

Caption: Typical synthesis of the target compound.

This process can introduce several predictable impurities that must be monitored:

- Unreacted Starting Materials: Vanillin, 2-phenylethyl halide.
- Reagent-Related Impurities: Residual base or phase-transfer catalysts.
- Side-Products: Products of self-condensation or elimination reactions.
- Degradation Products: Benzaldehydes are susceptible to air oxidation, forming the corresponding benzoic acid.[2] This is a critical impurity to monitor for stability and storage.

Chromatographic Analysis for Purity and Assay

Chromatographic methods are the cornerstone for determining the purity of chemical compounds. We present protocols for both HPLC and GC-MS, which provide orthogonal information for a high-confidence purity assessment.

High-Performance Liquid Chromatography (HPLC-UV)

© 2026 BenchChem. All rights reserved.

Principle: Reversed-phase HPLC is the method of choice for non-volatile, polar to moderately non-polar compounds.[3] A C18 column provides excellent hydrophobic retention for the aromatic rings, while a gradient elution with acetonitrile and water ensures sharp peaks and efficient separation of the main compound from both more polar (e.g., vanillin) and less polar impurities. UV detection is highly effective due to the strong absorbance of the conjugated aromatic system.

Protocol: Purity Determination by HPLC

- Sample Preparation: Accurately weigh and dissolve 10 mg of the sample in 10 mL of acetonitrile to create a 1.0 mg/mL stock solution. Further dilute to 0.1 mg/mL with a 50:50 acetonitrile:water mixture for analysis.
- Instrumentation: A standard HPLC system with a UV/DAD detector is required.
- Chromatographic Conditions:

© 2026 BenchChem. All rights reserved.

Parameter	Condition	Rationale
Column	C18, 4.6 x 150 mm, 5 µm	Industry standard for robust separation of aromatic compounds.
Mobile Phase A	Water with 0.1% Formic Acid	Acidification improves peak shape for aldehydes and acids.
Mobile Phase B	Acetonitrile with 0.1% Formic Acid	Strong organic solvent for elution.
Gradient	0-20 min: 40% to 95% B; 20-25 min: 95% B; 25.1-30 min: 40% B	A gradient is essential to elute all potential impurities with varying polarities.
Flow Rate	1.0 mL/min	Standard flow for a 4.6 mm ID column.
Column Temp.	30 °C	Ensures reproducible retention times.
Injection Vol.	10 µL	
Detection	UV at 254 nm and 280 nm	254 nm provides a general response for aromatic compounds; 280 nm is closer to the λmax for the substituted benzaldehyde structure.

- System Suitability: Before analysis, inject a standard solution five times. The relative standard deviation (RSD) for the peak area should be <2.0%. The tailing factor for the main peak should be between 0.8 and 1.5.

Gas Chromatography-Mass Spectrometry (GC-MS)

Principle: GC-MS is a powerful technique for identifying and quantifying volatile and semi-volatile impurities. It provides exceptional separation and definitive identification based on

© 2026 BenchChem. All rights reserved.

mass spectra.[4][5] This method is particularly useful for detecting residual starting materials or low molecular weight side-products.

Protocol: Impurity Identification by GC-MS

- Sample Preparation: Prepare a 1.0 mg/mL solution of the sample in a suitable solvent like Dichloromethane or Ethyl Acetate.
- Instrumentation: A GC system coupled to a Mass Spectrometer (e.g., Quadrupole).
- Chromatographic Conditions:

© 2026 BenchChem. All rights reserved.

Parameter	Condition	Rationale
Column	HP-5MS (or equivalent), 30 m x 0.25 mm, 0.25 µm	A 5% phenyl-methylpolysiloxane column is a robust, general-purpose column suitable for a wide range of aromatic compounds. [6]
Carrier Gas	Helium, constant flow at 1.2 mL/min	Inert carrier gas.
Inlet Temp.	250 °C	Ensures complete volatilization without degradation.
Oven Program	Start at 100 °C (hold 2 min), ramp to 280 °C at 15 °C/min, hold for 5 min	The temperature ramp allows for the separation of compounds with different boiling points.
MS Transfer Line	280 °C	Prevents condensation of analytes.
Ion Source Temp.	230 °C	
Ionization Mode	Electron Ionization (EI) at 70 eV	Standard mode for creating reproducible fragmentation patterns.
Mass Range	40 - 450 amu	Covers the mass of the parent compound and expected fragments/impurities.

Spectroscopic Analysis for Structural Elucidation

Spectroscopic techniques are required to confirm that the synthesized molecule has the correct chemical structure.

Nuclear Magnetic Resonance (NMR) Spectroscopy

© 2026 BenchChem. All rights reserved.

Principle: NMR is the most powerful tool for unambiguous structural determination of organic molecules. ^{1}H NMR provides information on the number and environment of protons, while ^{13}C NMR identifies all unique carbon atoms.

Protocol: Structural Confirmation by NMR

- Sample Preparation: Dissolve approximately 10-15 mg of the sample in ~0.7 mL of Deuterated Chloroform ($CDCl_3$). Add a small amount of Tetramethylsilane (TMS) as an internal standard if required.
- Data Acquisition: Acquire ^{1}H, ^{13}C, and optionally 2D spectra (e.g., COSY, HSQC) on a 400 MHz or higher spectrometer.

Expected Chemical Shifts (Predicted):

Assignment	^{1}H NMR (δ, ppm)	^{13}C NMR (δ, ppm)	Notes
Aldehyde (-CHO)	~9.8 (s, 1H)	~191.0	Singlet, downfield due to deshielding.
Aromatic (Benzaldehyde ring)	~7.4 (m, 2H), ~7.0 (d, 1H)	~150-110	Complex splitting pattern.
Methoxy ($-OCH_3$)	~3.9 (s, 3H)	~56.0	Sharp singlet.
Phenoxy $-OCH_2-$	~4.2 (t, 2H)	~70.0	Triplet, coupled to adjacent CH_2.
Phenyl $-CH_2-$	~3.1 (t, 2H)	~36.0	Triplet, coupled to adjacent OCH_2.
Aromatic (Phenyl ring)	~7.3 (m, 5H)	~138-126	Multiplet for the monosubstituted phenyl group.

Fourier-Transform Infrared (FTIR) Spectroscopy

Principle: FTIR spectroscopy identifies the functional groups present in a molecule by detecting the absorption of infrared radiation corresponding to specific vibrational modes. It is a fast and

© 2026 BenchChem. All rights reserved.

reliable technique for confirming the presence of key structural features.[7][8]

Protocol: Functional Group Analysis by FTIR

- Sample Preparation: Place a small amount of the solid sample directly onto the diamond crystal of an ATR-FTIR spectrometer and acquire the spectrum. Alternatively, prepare a KBr pellet.
- Data Acquisition: Scan from 4000 to 400 cm^{-1}.

Expected Characteristic Absorptions:

Wavenumber (cm^{-1})	Vibration	Functional Group
~3060-3030	C-H Stretch	Aromatic C-H
~2950-2850	C-H Stretch	Aliphatic C-H (methoxy, ethoxy)
~2820 and ~2720	C-H Stretch	Aldehyde C-H (Fermi doublet) [7]
~1690	C=O Stretch	Aromatic Aldehyde (Conjugated)[8]
~1600, ~1585, ~1500	C=C Stretch	Aromatic Ring
~1260	C-O Stretch	Aryl Ether
~1140	C-O Stretch	Alkyl Ether

Mass Spectrometry (MS)

Principle: When coupled with GC or used with a direct infusion source, MS confirms the molecular weight of the compound via the molecular ion peak ($M^{+\cdot}$). The fragmentation pattern provides a fingerprint that can be used to confirm the structure.

Expected Fragmentation Pattern (EI):

© 2026 BenchChem. All rights reserved.

The molecular ion peak should be observed at m/z = 256. Key fragments would arise from the cleavage of the ether bond, which is often a favored fragmentation pathway.

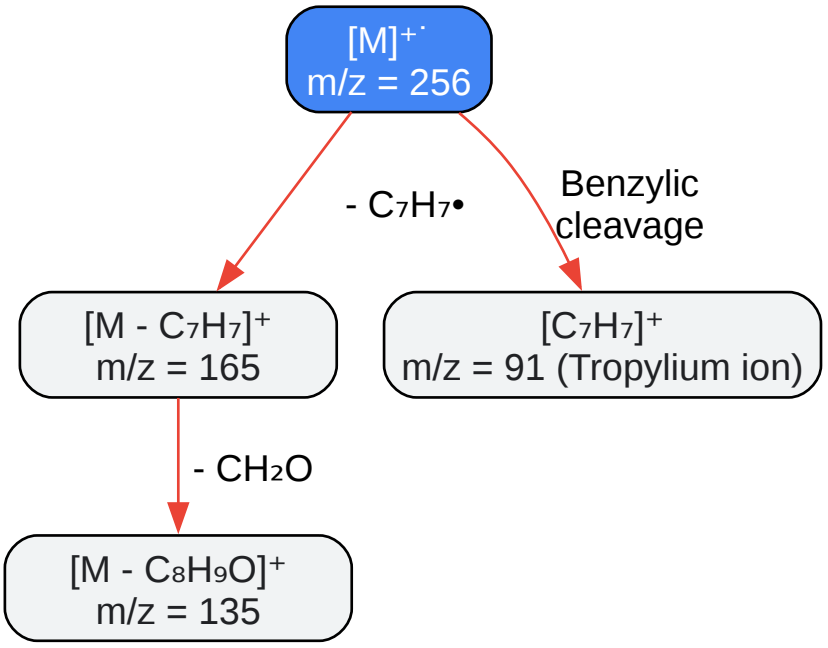

Click to download full resolution via product page

Caption: Predicted major fragmentation pathways in EI-MS.

Integrated Analytical Workflow

A complete and trustworthy characterization relies on the synergistic use of these techniques. No single method is sufficient. The following workflow ensures a comprehensive analysis.

© 2026 BenchChem. All rights reserved.

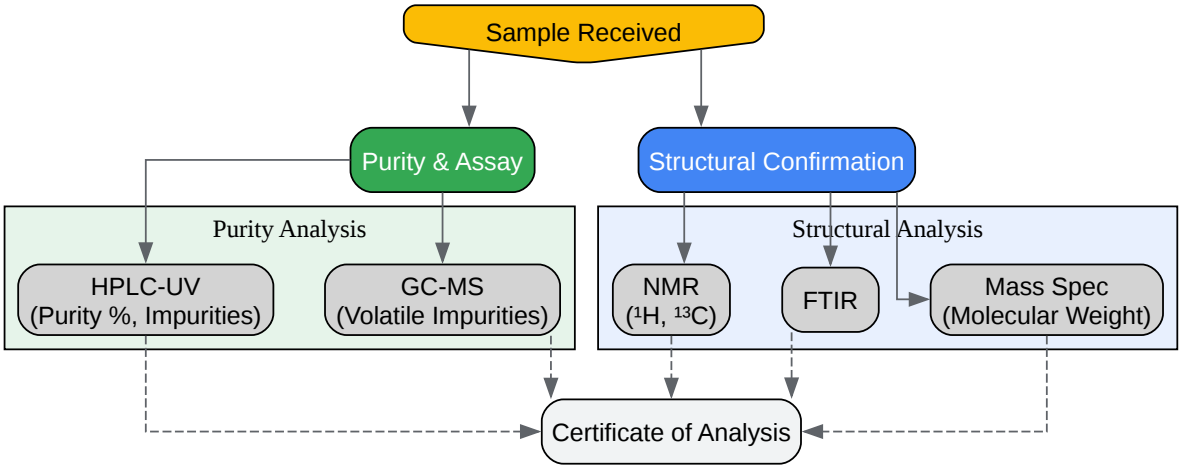

Click to download full resolution via product page

Caption: Integrated workflow for complete characterization.

References

- Majzik-Solymos, E., et al. (2007, August 25). SPE-LC-MS-MS determination of phenoxy acid herbicides in surface and ground water. Microchemical Journal. Available at: [Link]
- PubMed. (n.d.). [Application of gas chromatography-high resolution quadrupole time of flight mass spectrometry to the analysis of benzaldehyde, benzyl alcohol acetophenone and phenylacetaldehyde in complex aromatic samples]. Available at: [Link]
- Busch, K. L., et al. (n.d.). Negative ion mass spectra of some polychlorinated 2-phenoxyphenols. PMC - NIH. Available at: [Link]
- ACS Publications. (2021, October 1). Gas Chromatography–Mass Spectrometric Analysis of Derivatives of Dibenzalacetone Aldol Products. Journal of Chemical Education. Available at: [Link]
- Bisphenol A Information & Resources. (2009, April 14). Recent advances in mass spectrometry analysis of phenolic endocrine disruptors and related compounds. Available at:

© 2026 BenchChem. All rights reserved.

[Link]

- RSC Publishing. (2019, February 26). Development of a HPLC-FL method to determine benzaldehyde after derivatization with N-acetylhydrazine acridone and its application for determination of semicarbazide-sensitive amine oxidase activity in human serum. Available at: [Link]
- MDPI. (n.d.). Qualitative and Quantitative Mass Spectrometry Approaches for the Analysis of Phenolic Compounds in Complex Natural Matrices. Available at: [Link]
- eConference.io. (n.d.). Fast Analysis of Chlorinated Phenoxy Herbicides in Environmental Samples by Negative ESI LC-MS/MS – 14337. Available at: [Link]
- PubMed. (1994, January). Gas-liquid chromatographic and difference spectrophotometric techniques for the determination of benzaldehyde in benzyl alcohol. Available at: [Link]
- NC State University Libraries. (n.d.). 19.14 Spectroscopy of Aldehydes and Ketones. Organic Chemistry: A Tenth Edition – OpenStax adaptation 1. Available at: [Link]
- Chemcasts. (n.d.). Thermophysical Properties of 3-Methoxy-4-(2-oxiranylmethoxy)benzaldehyde. Available at: [Link]
- Doc Brown's Advanced Organic Chemistry. (n.d.). Infrared spectrum of benzaldehyde. Available at: [Link]
- PubChem. (n.d.). 3-Methoxy-4-prop-2-ynyloxy-benzaldehyde. Available at: [Link]
- Synthesis and Characterization of 4-Phenacyloxy Benzaldehyde Derivatives. (n.d.). Available at: [Link]
- RSC Publishing. (n.d.). High-resolution FTIR spectroscopy of benzaldehyde in the far-infrared region: probing the rotational barrier. Available at: [Link]
- ResearchGate. (n.d.). GC/MS analysis for the reaction of benzaldehyde and o-diaminobenzene in DMAc at 160 8C. Available at: [Link]
- PubChem. (n.d.). 3-Methoxy-4-phenoxybenzaldehyde. Available at: [Link]

© 2026 BenchChem. All rights reserved.

- ResearchGate. (n.d.). IR Spectra of benzaldehyde and its derivatives in different aggregate states. Available at: [Link]
- ResearchGate. (n.d.). FT-IR Spectrum of Benzaldehyde. Available at: [Link]
- RSC Publishing. (n.d.). Direct analysis of aromatic pollutants using a HPLC-FLD/DAD method for monitoring biodegradation processes. Available at: [Link]
- Royal Society of Chemistry. (2008). Supplementary Material (ESI) for Chemical Communications. Available at: [Link]
- ACS Publications. (1942). Assay of Benzaldehyde. Use of Hydroxylammonium Sulfate and Aqueous Sodium Hydroxide. Analytical Chemistry. Available at: [Link]
- Human Metabolome Database. (n.d.). 1H NMR Spectrum (1D, 400 MHz, CDCl3, experimental) (HMDB0029686). Available at: [Link]
- ResearchGate. (n.d.). Development and Limit Validation of a GC-FID Method for the Quantitative Analysis of Benzaldehyde and Related Substances. Available at: [Link]
- SIELC Technologies. (n.d.). HPLC Separation of Aromatic Compounds (PAH) on Mixed-Mode and Reverse Phase Columns. Available at: [Link]
- HELIX Chromatography. (n.d.). HPLC Analysis of 6 Aromatic Alcohols, Acids and Neutral Compounds on Amaze Aromatic Stationary Phases. Available at: [Link]
- Google Patents. (n.d.). CN107827722B - Synthetic method of 3-ethoxy-4-methoxybenzaldehyde.
- Google Patents. (n.d.). EP3237394A1 - An efficient process for the synthesis of alkoxy substituted benzaldehydes.
- Waters Corporation. (n.d.). Determination of Aromatic Hydrocarbon Types in Middle Distillates with the Alliance HPLC System and RI Detection According to ASTM D6591 (IP548). Available at: [Link]
- BMRB. (n.d.). bmse010130 4-methoxy Benzaldehyde. Available at: [Link]
- Wikipedia. (n.d.). Benzaldehyde. Available at: [Link]

© 2026 BenchChem. All rights reserved.

- Royal Society of Chemistry. (2010). Supporting Information. Available at: [Link]
- ResearchGate. (n.d.). Benzaldehyde derivatives with investigated inhibition profile. Available at: [Link]
- Google Patents. (n.d.). CN101570473B - Method for synthesizing 3-methoxybenzaldehyde.
- PubMed. (2013, January 10). A review of impurity profiling and synthetic route of manufacture of methylamphetamine, 3,4-methylenedioxymethylamphetamine, amphetamine, dimethylamphetamine and p-methoxyamphetamine. Available at: [Link]

Need Custom Synthesis?

BenchChem offers custom synthesis for rare earth carbides and specific isotopiclabeling.

Email: info@benchchem.com or Request Quote Online.

Sources

- 1. matrixscientific.com [matrixscientific.com]
- 2. Benzaldehyde - Wikipedia [en.wikipedia.org]
- 3. HPLC Separation of Aromatic Compounds (PAH) on Mixed-Mode and Reverse Phase Columns | SIELC Technologies [sielc.com]
- 4. [Application of gas chromatography-high resolution quadrupole time of flight mass spectrometry to the analysis of benzaldehyde, benzyl alcohol acetophenone and phenylacetaldehyde in complex aromatic samples] - PubMed [pubmed.ncbi.nlm.nih.gov]
- 5. pubs.acs.org [pubs.acs.org]
- 6. rsc.org [rsc.org]
- 7. 19.14 Spectroscopy of Aldehydes and Ketones – Organic Chemistry: A Tenth Edition – OpenStax adaptation 1 [ncstate.pressbooks.pub]
- 8. C7H6O C6H5CHO infrared spectrum of benzaldehyde prominent wavenumbers cm-1 detecting ? functional groups present finger print for identification of benzaldehyde image diagram doc brown's advanced organic chemistry revision notes [docbrown.info]
- To cite this document: BenchChem. [Comprehensive Analytical Characterization of 3-Methoxy-4-(2-phenylethoxy)benzaldehyde]. BenchChem, [2026]. [Online PDF]. Available at:

© 2026 BenchChem. All rights reserved.

[https://www.benchchem.com/product/b326912/docs#comprehensive-analytical-characterization-of-3-methoxy-4-2-phenylethoxy-benzaldehyde]

Disclaimer & Data Validity:

The information provided in this document is for Research Use Only (RUO) and is strictly not intended for diagnostic or therapeutic procedures. While BenchChem strives to provide accurate protocols, we make no warranties, express or implied, regarding the fitness of this product for every specific experimental setup.

Technical Support: The protocols provided are for reference purposes. Unsure if this reagent suits your experiment?

Need Industrial/Bulk Grade? Request Custom Synthesis Quote

BenchChem

Our mission is to be the trusted global source of essential and advanced chemicals, empowering scientists and researchers to drive progress in science and industry.

Contact

Address: 3281 E Guasti Rd

Ontario, CA 91761, United States

Phone: (601) 213-4426

Email: info@benchchem.com

Contact our Ph.D. Support Team for a compatibility check

© 2026 BenchChem. All rights reserved.