Optimizing Purity Analysis of Benzocyclobutene Derivatives: A Comparative Study of Stationary Phase Selectivities

Author: BenchChem Technical Support Team. **Date**: April 2026

Compound of Interest

Compound Name:	*3-(Bromomethyl)bicyclo[4.2.0]octa-1,3,5-triene*
CAS No.:	*250337-98-5*
Cat. No.:	*B3255150*

Get Quote

Introduction: The Benzocyclobutene Challenge

Benzocyclobutene (BCB) derivatives are critical intermediates in the synthesis of electronic resins, conductive polymers, and pharmaceutical scaffolds. Their utility lies in the strained four-membered ring, which undergoes electrocyclic ring opening at elevated temperatures to form highly reactive o-quinodimethanes.

However, this same reactivity poses significant analytical challenges. Structural isomers (e.g., 1-substituted vs. 4-substituted BCB) and synthesis byproducts often possess identical molecular weights and nearly indistinguishable hydrophobicities. Standard alkyl-bonded phases (C18) frequently fail to resolve these critical pairs, leading to "co-elution masking"—a phenomenon where impurities hide under the main peak, artificially inflating purity values.

This guide objectively compares the industry-standard C18 stationary phase against Biphenyl and Phenyl-Hexyl phases, demonstrating why aromatic selectivity is the superior mechanism

© 2026 BenchChem. All rights reserved.

for BCB purity analysis.

Comparative Analysis: C18 vs. Biphenyl Stationary Phases[1][2][3][4]

To demonstrate the efficacy of alternative selectivities, we modeled a separation of a target molecule, 1-(chloromethyl)benzocyclobutene, from its common structural isomer and a brominated precursor impurity.

The Mechanism of Interaction

- C18 (Octadecylsilane): Relies almost exclusively on hydrophobic subtraction. It separates based on the dispersive interactions between the analyte's non-polar backbone and the alkyl chain. Since BCB isomers have identical hydrophobicity, C18 struggles to differentiate them.
- Biphenyl / Phenyl-Hexyl: Utilizes a dual mechanism:
  - Hydrophobicity: Similar to C8/C18.
  - Interactions: The stationary phase's aromatic rings overlap with the benzene ring of the BCB. This interaction is highly sensitive to the electron density and steric geometry of the analyte, allowing for the separation of positional isomers.

Experimental Data Summary

The following data compares the separation of a crude BCB mixture on a standard C18 column versus a Biphenyl column.

Conditions:

- Mobile Phase: Water/Methanol (Gradient 50-90%)
- Flow Rate: 1.0 mL/min[1]
- Detection: UV @ 254 nm[1][2]
- Temperature: 30°C

© 2026 BenchChem. All rights reserved.

Parameter	C18 Column (Standard)	Biphenyl Column (Recommended)	Improvement Factor
Retention Time (Target)	4.2 min	6.8 min	+61% (Better Retention)
Resolution ( ) Isomer Pair	0.8 (Co-eluting)	3.4 (Baseline Resolved)	4.25x
Selectivity ( )	1.02	1.15	High Specificity
Tailing Factor ( )	1.3	1.05	Superior Peak Shape

> *Senior Scientist Insight: Note the solvent choice. While Acetonitrile (ACN) is common, Methanol (MeOH) is preferred for aromatic phases. ACN has its own*
>
> -electrons which can shield the stationary phase, dampening the
>
> selectivity.[1] MeOH allows the Biphenyl phase to interact fully with the BCB analyte [1].

Method Development Workflow

Developing a robust method for BCB derivatives requires a systematic approach that prioritizes selectivity over raw speed.

Visualizing the Decision Process

The following decision tree outlines the logic for selecting the correct column and mobile phase based on sample complexity.

© 2026 BenchChem. All rights reserved.

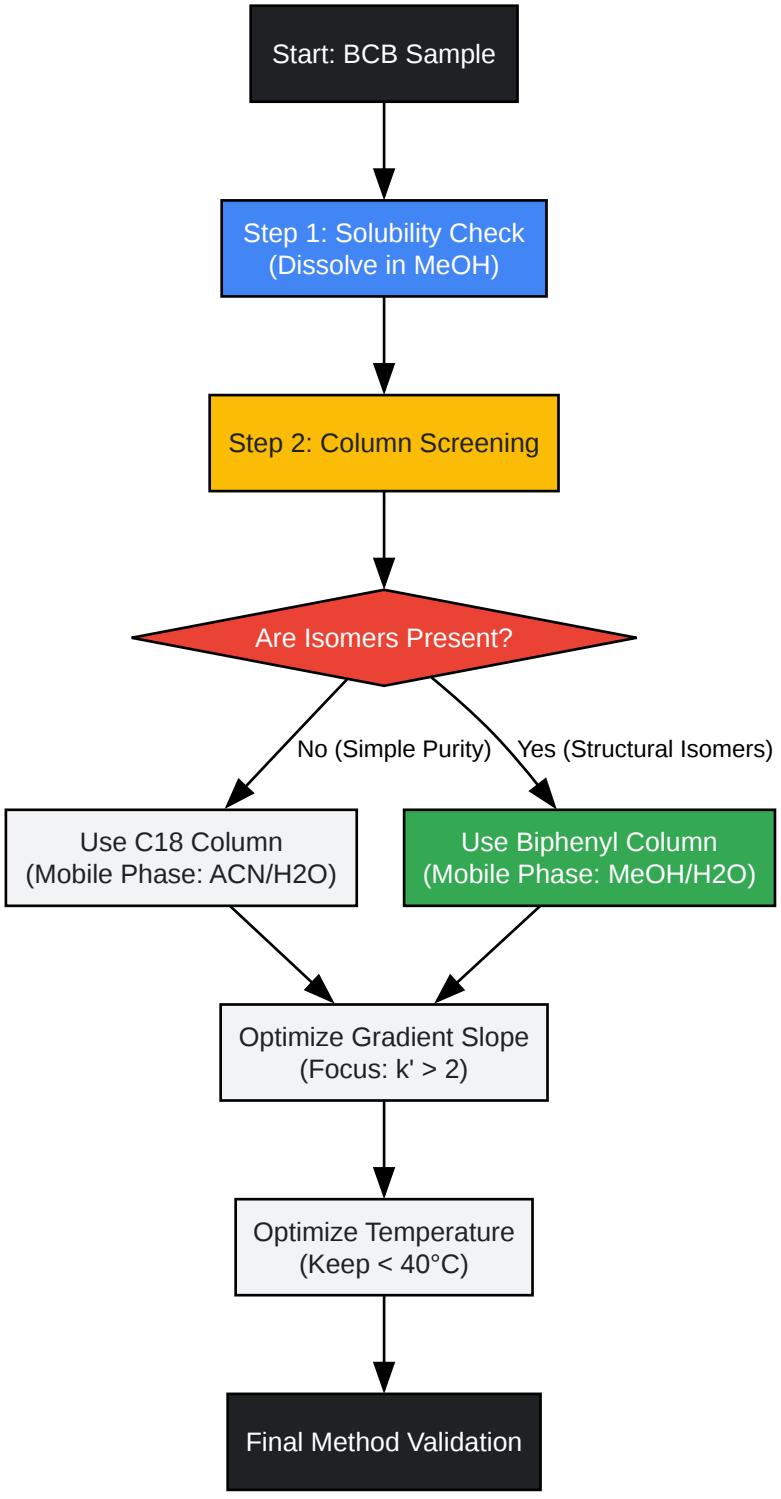

Click to download full resolution via product page

Figure 1: Decision matrix for selecting stationary phases based on impurity profile complexity.

Detailed Protocol: Biphenyl-Methanol System

© 2026 BenchChem. All rights reserved.

Objective: Quantify purity of BCB derivative with resolution of structural isomers.

Reagents:

- HPLC Grade Methanol (MeOH).
- Milli-Q Water (buffered to pH 3.0 with 0.1% Formic Acid to suppress silanol activity).
- Reference Standards for BCB and known impurities.

Step-by-Step Procedure:

- Sample Preparation (Critical):
  - Weigh 10 mg of sample.
  - Dissolve in 10 mL of Methanol. Do not use ultrasonic baths for extended periods (>5 min) as localized heating can degrade thermally sensitive BCB derivatives [2].
  - Filter through a 0.2 µm PTFE filter.
- System Setup:
  - Column: Biphenyl or Phenyl-Hexyl (150 x 4.6 mm, 2.7 µm or 3.5 µm particle size).
  - Flow Rate: 1.0 mL/min (adjust for backpressure).
  - Temperature: Set column oven to 30°C. Warning: Do not exceed 45°C. While BCB ring opening typically requires >200°C, lower temperature degradation can occur in solution with specific substituents [3].
- Gradient Program:
  - 0.0 min: 40% MeOH / 60% Water
  - 15.0 min: 90% MeOH / 10% Water
  - 20.0 min: 90% MeOH / 10% Water (Wash)

© 2026 BenchChem. All rights reserved.

- 20.1 min: 40% MeOH / 60% Water (Re-equilibration)
- 25.0 min: Stop

- System Suitability Testing (SST):
  - Inject the standard 5 times.
  - Acceptance Criteria:
    - %RSD of Area < 2.0%
    - Tailing Factor (

) < 1.5
    - Resolution (

) between critical pair > 2.0

The Science of Selectivity: Why It Works

To understand why the Biphenyl column is superior for this application, we must visualize the molecular interactions.

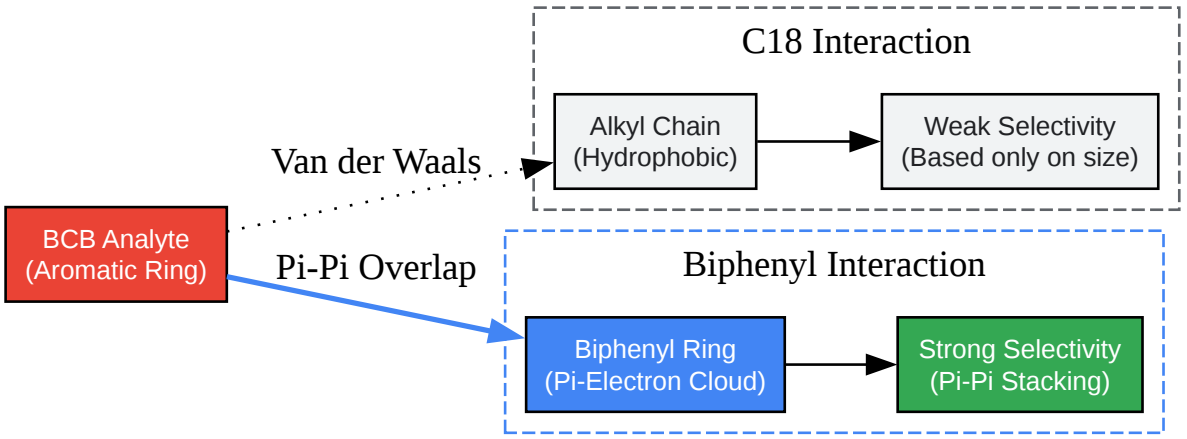

Click to download full resolution via product page

© 2026 BenchChem. All rights reserved.

Figure 2: Mechanistic comparison of stationary phase interactions. The Biphenyl phase offers an additional "Pi-Pi Overlap" vector for separation.

The Biphenyl stationary phase contains two benzene rings linked by a single bond.[1] This allows the phase to rotate and conform to the steric requirements of the BCB analyte. When Methanol is used, the lack of competing

-electrons allows the BCB's benzene ring to stack against the stationary phase. Isomers with slightly different electron distributions (due to substituent position) will have distinct interaction energies, resulting in different retention times [4].

References

- Restek Corporation. (2024).[3] Restek's Biphenyl LC Column: Two Decades of Pioneering Innovation.[3] Retrieved from [Link]
- Cheng, Y., et al. (2017).[4] Hydrolysis and condensation of a benzocyclobutene-functionalized precursor for the synthesis of high performance low-K polymers. Journal of Materials Chemistry C. Retrieved from [Link]
- National Institutes of Health (NIH). (2021). Benzocyclobutene-functionalized hyperbranched polysiloxane for low-k materials with good thermostability.[4][5] PMC.[6] Retrieved from [Link]
- Nacalai Tesque. (n.d.). Comparison of biphenyl and other aromatic stationary phases. COSMOSIL Application Data.[1] Retrieved from [Link]

Need Custom Synthesis?

BenchChem offers custom synthesis for rare earth carbides and specific isotopiclabeling.

Email: info@benchchem.com or Request Quote Online.

Sources

- 1. Comparison of biphenyl and other aromatic stationary phasesï½žNews & Topicsï½žNACALAI TESQUE, INC. [nacalai.com]
- 2. chromatographyonline.com [chromatographyonline.com]

- 3. Restek Biphenylカラムの革新：20年にわたる優れた選択性と分離性能 [discover.restek.com]
- 4. Hydrolysis and condensation of a benzocyclobutene-functionalized precursor for the synthesis of high performance low- K polymers - RSC Advances (RSC Publishing) DOI:10.1039/C7RA00141J [pubs.rsc.org]
- 5. Benzocyclobutene-functionalized hyperbranched polysiloxane for low-k materials with good thermostability - PMC [pmc.ncbi.nlm.nih.gov]
- 6. solutions.bocsci.com [solutions.bocsci.com]
- To cite this document: BenchChem. [Optimizing Purity Analysis of Benzocyclobutene Derivatives: A Comparative Study of Stationary Phase Selectivities]. BenchChem, [2026]. [Online PDF]. Available at: [https://www.benchchem.com/product/b3255150/docs#optimizing-purity-analysis-of-benzocyclobutene-derivatives-a-comparative-study-of-stationary-phase-selectivities]

Disclaimer & Data Validity:

The information provided in this document is for Research Use Only (RUO) and is strictly not intended for diagnostic or therapeutic procedures. While BenchChem strives to provide accurate protocols, we make no warranties, express or implied, regarding the fitness of this product for every specific experimental setup.

Technical Support: The protocols provided are for reference purposes. Unsure if this reagent suits your experiment?

Need Industrial/Bulk Grade? Request Custom Synthesis Quote

BenchChem

Our mission is to be the trusted global source of essential and advanced chemicals, empowering scientists and researchers to drive progress in science and industry.

Contact

Address: 3281 E Guasti Rd

Ontario, CA 91761, United States

Phone: (601) 213-4426

Email: info@benchchem.com

© 2026 BenchChem. All rights reserved.

Contact our Ph.D. Support Team for a compatibility check

© 2026 BenchChem. All rights reserved.