Application Note & Detailed Protocol: Synthesis of 5-(Bromomethyl)-2,4-dimethylthiazole

Author: BenchChem Technical Support Team. **Date**: April 2026

Compound of Interest	
Compound Name:	*5-(Bromomethyl)-2,4-dimethylthiazole*
CAS No.:	*180597-84-6*
Cat. No.:	*B3246967*

Get Quote

Abstract

This document provides a comprehensive guide for the synthesis of **5-(Bromomethyl)-2,4-dimethylthiazole**, a critical building block in pharmaceutical and materials science research. The protocol details the selective bromination of the 5-methyl group of 2,4,5-trimethylthiazole using N-Bromosuccinimide (NBS) as the brominating agent and dibenzoyl peroxide as a radical initiator. We will elucidate the underlying free-radical mechanism, provide a detailed, step-by-step experimental procedure, outline crucial safety precautions, and offer insights into process optimization and characterization. This guide is designed for researchers and professionals in organic synthesis and drug development, emphasizing reproducibility, safety, and a deep understanding of the reaction causality.

Introduction and Scientific Background

Thiazole derivatives are prevalent scaffolds in a multitude of biologically active compounds and functional materials.[1][2][3] The functionalization of the thiazole ring is a key strategy in medicinal chemistry for modulating pharmacological properties. **5-(Bromomethyl)-2,4-**

© 2026 BenchChem. All rights reserved.

dimethylthiazole serves as a versatile intermediate, enabling the introduction of various functionalities at the 5-position through nucleophilic substitution of the reactive bromomethyl group.

The synthesis leverages the principles of the Wohl-Ziegler reaction, a method for the allylic or benzylic bromination of hydrocarbons using an N-bromoamide and a radical initiator.[4] The methyl group at the 5-position of the 2,4,5-trimethylthiazole ring is analogous to a benzylic position due to its proximity to the aromatic thiazole system. This allows for selective radical abstraction of a hydrogen atom, leading to the desired product over other possible bromination pathways, such as addition to the ring. N-Bromosuccinimide (NBS) is the reagent of choice as it provides a low, steady concentration of bromine radicals (Br•) and molecular bromine (Br_2), which suppresses competitive electrophilic addition reactions.[5][6][7]

Reaction Mechanism: Free-Radical Chain Process

The conversion of 2,4,5-trimethylthiazole to its 5-(bromomethyl) derivative proceeds via a well-established free-radical chain mechanism.[8][9][10] This process can be broken down into three distinct stages: initiation, propagation, and termination.

- Initiation: The reaction is initiated by the thermal decomposition of a radical initiator, such as dibenzoyl peroxide or azobisisobutyronitrile (AIBN), to generate initial radicals. These radicals then abstract a hydrogen from trace amounts of HBr present, or react with NBS, to produce the key bromine radical (Br•) that starts the chain reaction.[4][6]

- Propagation: This is a two-step cyclic process.

  - A bromine radical (Br•) selectively abstracts a hydrogen atom from the C5-methyl group of 2,4,5-trimethylthiazole. This C-H bond is weaker and the resulting thiazolyl-methyl radical is stabilized by resonance with the aromatic ring, making this step highly regioselective.[7]

  - The newly formed thiazolyl-methyl radical reacts with a molecule of Br_2 (generated in situ from the reaction of NBS with HBr) to yield the final product, **5-(Bromomethyl)-2,4-dimethylthiazole**, and a new bromine radical (Br•), which continues the chain.[7][8]

- Termination: The reaction concludes when two radicals combine to form a stable, non-radical species. This can occur in various combinations, effectively ending the chain process.

© 2026 BenchChem. All rights reserved.

Mechanism Diagram

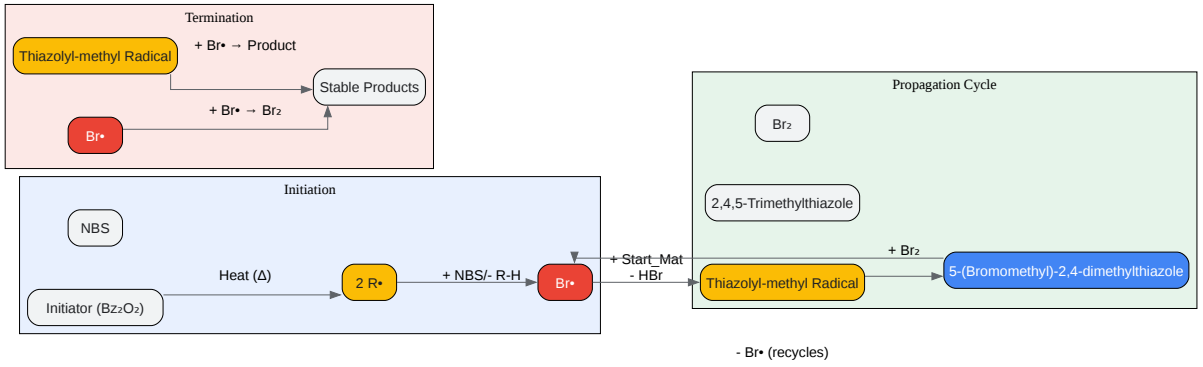

Click to download full resolution via product page

Caption: Free-radical chain mechanism for the synthesis.

Detailed Experimental Protocol

This protocol is optimized for a laboratory scale synthesis. All operations should be performed in a well-ventilated fume hood.

Materials and Equipment

- Chemicals:
  - 2,4,5-trimethylthiazole (>98%)

© 2026 BenchChem. All rights reserved.

- N-Bromosuccinimide (NBS) (>99%, recrystallized if yellow)
- Dibenzoyl peroxide (BPO) (75%, remainder water for stabilization)
- Chlorobenzene (Anhydrous, >99.5%)
- Saturated sodium bicarbonate solution ($NaHCO_3$)
- 10% Sodium thiosulfate solution ($Na_2S_2O_3$)
- Saturated sodium chloride solution (Brine)
- Anhydrous magnesium sulfate ($MgSO_4$)
- Ethyl acetate (ACS grade)
- Hexanes (ACS grade)

- Equipment:
  - Round-bottom flask (250 mL)
  - Reflux condenser with a drying tube (filled with $CaCl_2$)
  - Magnetic stirrer and stir bar
  - Heating mantle with temperature controller
  - Separatory funnel (500 mL)
  - Büchner funnel and filter paper
  - Rotary evaporator
  - Glassware for extraction and filtration
  - Silica gel for column chromatography

Reagent Quantities

© 2026 BenchChem. All rights reserved.

Reagent	MW (g/mol)	Molar Eq.	Moles (mol)	Mass/Volume
2,4,5-trimethylthiazole	127.21	1.0	0.0786	10.0 g
N-Bromosuccinimide (NBS)	177.98	1.05	0.0825	14.68 g
Dibenzoyl Peroxide (BPO)	242.23	0.02	0.00157	0.38 g (dry weight)
Chlorobenzene	112.56	-	-	120 mL

Step-by-Step Synthesis Procedure

- Reaction Setup: Assemble a 250 mL round-bottom flask with a magnetic stir bar and a reflux condenser. Attach a calcium chloride drying tube to the top of the condenser to protect the reaction from atmospheric moisture.
- Charging Reagents: To the flask, add 2,4,5-trimethylthiazole (10.0 g, 0.0786 mol) and chlorobenzene (120 mL). Stir the solution until the thiazole is fully dissolved.
- Addition of NBS and Initiator: Add N-Bromosuccinimide (14.68 g, 0.0825 mol) and dibenzoyl peroxide (0.38 g, 0.00157 mol) to the flask.[11]
- Heating and Reflux: Heat the reaction mixture to reflux (approx. 132°C for chlorobenzene) using a heating mantle. Maintain a gentle reflux for 2-3 hours. The reaction can be monitored by TLC (Thin Layer Chromatography) for the disappearance of the starting material. The reaction mixture will turn reddish-brown.
- Cooling and Filtration: Once the reaction is complete, cool the flask to room temperature. The byproduct, succinimide, will precipitate as a white solid. Filter the mixture through a Büchner funnel to remove the succinimide and wash the solid with a small amount of cold ethyl acetate.
- Aqueous Work-up: Transfer the filtrate to a 500 mL separatory funnel.

© 2026 BenchChem. All rights reserved.

- Wash the organic layer sequentially with 10% sodium thiosulfate solution (2 x 50 mL) to remove any unreacted bromine, followed by saturated sodium bicarbonate solution (2 x 50 mL) to neutralize any acidic byproducts.
- Finally, wash with brine (1 x 50 mL) to aid in the separation of the layers.

- Drying and Solvent Removal: Dry the organic layer over anhydrous magnesium sulfate ($MgSO_4$), filter, and concentrate the solvent using a rotary evaporator. This will yield the crude product as a yellow to brown oil or solid.
- Purification: The crude product can be purified by flash column chromatography on silica gel using a gradient of ethyl acetate in hexanes (e.g., 5% to 20% ethyl acetate) to afford the pure **5-(Bromomethyl)-2,4-dimethylthiazole**.

Characterization

The identity and purity of the product should be confirmed using standard analytical techniques.

- ^1H NMR ($CDCl_3$, 400 MHz): Expected chemical shifts (δ, ppm): ~4.5-4.7 (s, 2H, $-CH_2Br$), ~2.6-2.7 (s, 3H, C2-CH_3), ~2.4-2.5 (s, 3H, C4-CH_3).
- ^{13}C NMR ($CDCl_3$, 100 MHz): Expected signals for the bromomethyl carbon, two methyl carbons, and the three thiazole ring carbons.[3][12][13]
- Mass Spectrometry (MS): The mass spectrum should show the characteristic isotopic pattern for a bromine-containing compound (M+ and M+2 peaks in an approximate 1:1 ratio).[14]

Experimental Workflow Diagram

Caption: Step-by-step experimental workflow.

Safety and Handling Precautions

This procedure involves hazardous materials and should only be performed by trained personnel in a suitable laboratory setting.[15][16][17][18]

© 2026 BenchChem. All rights reserved.

- N-Bromosuccinimide (NBS): A strong oxidizing agent and corrosive. It can cause severe skin burns and eye damage.[15][18] Avoid contact with skin and eyes. Handle in a fume hood and wear appropriate PPE. Keep away from combustible materials.[16]
- Dibenzoyl Peroxide (BPO): An organic peroxide that may cause fire upon heating.[17] It is a skin and eye irritant. Store in a cool place and avoid friction or shock.
- Chlorobenzene: A toxic and flammable solvent. Harmful if inhaled or absorbed through the skin. Operations must be conducted in a well-ventilated fume hood.
- **5-(Bromomethyl)-2,4-dimethylthiazole** (Product): As a bromomethyl compound, it is expected to be a lachrymator and a strong irritant. Handle with extreme care, wearing gloves, safety goggles, and a lab coat.
- Personal Protective Equipment (PPE): Safety goggles, a flame-retardant lab coat, and chemically resistant gloves (e.g., nitrile) are mandatory at all times.

Troubleshooting

© 2026 BenchChem. All rights reserved.

Problem	Possible Cause(s)	Suggested Solution(s)
Low or No Reaction	1. Inactive initiator (old BPO).2. Reaction temperature too low.3. Wet solvent or reagents.	1. Use fresh BPO or AIBN.2. Ensure the mixture is at a vigorous reflux.3. Use anhydrous solvent and dry glassware thoroughly.
Formation of Di-brominated Byproduct	1. Excess NBS used.2. Prolonged reaction time.	1. Use no more than 1.05-1.1 equivalents of NBS.2. Monitor the reaction closely by TLC and stop it once the starting material is consumed.
Starting Material Remains	1. Insufficient NBS or initiator.2. Insufficient reaction time.	1. Check calculations and ensure correct stoichiometry.2. Extend the reflux time, monitoring by TLC.
Difficult Work-up Emulsion	Formation of fine solids or insoluble materials at the interface.	Add more brine or filter the entire biphasic mixture through a pad of Celite to break the emulsion.

Conclusion

The protocol described provides a reliable and efficient method for the synthesis of **5-(Bromomethyl)-2,4-dimethylthiazole** via free-radical bromination. By understanding the underlying mechanism and adhering to the detailed procedural and safety guidelines, researchers can successfully prepare this valuable synthetic intermediate with good yield and high purity. The key to success lies in the use of anhydrous conditions, proper initiation, and careful monitoring of the reaction progress.

References

- Master Organic Chemistry. (2011). N-BromoSuccinimide (NBS) As A Reagent In Organic Chemistry. [Link]

© 2026 BenchChem. All rights reserved.

- Chemistry Steps. Allylic Bromination by NBS with Practice Problems. [Link]
- Chemistry LibreTexts. (2023). 5.3 Radical Bromination of Alkenes Part II: Allylic Bromination with NBS. [Link]
- BYJU'S. Mechanism of Free Radical Bromination. [Link]
- Gudla, P., & Boodida, S. (2015). A Facile Synthesis of 5-(2-Bromo-4-Methylthiazol-5-yl)-3-(Methylthio)-1H-Pyrazole. Journal of Applicable Chemistry, 4(1), 318-322. [Link]
- Wikipedia. N-Bromosuccinimide. [Link]
- Nanjing Suru Chemical Co., Ltd. (2025). N-Bromosuccinimide Enables Selective Bromination in Organic Chemistry. [Link]
- Aldrich. (2010). Safety Data Sheet: N-bromosuccinimide. [Link]
- Pearson. For each compound, predict the major product of free-radical bromination. [Link]
- Thesis Template. (n.d.). Synthesis and Chemistry of Thiazole Derivatives: Potential Antiviral Agents. [Link]
- Save My Exams. (2025). Free Radical Substitution. [Link]
- Organic Chemistry Portal. Synthesis of thiazoles. [Link]
- Neuman, R. C. Chapter 11 Free Radical Substitution and Addition Reactions. [Link]
- PrepChem.com. Synthesis of 2,4-Dimethyl-5-bromoacetyl-thiazole. [Link]
- Lookchem. (2022). Synthesis of Brominated Thiazoles via Sequential Bromination-Debromination Methods. [Link]
- YouTube. (2022). Alkene Reaction Mechanisms (Free Radical Bromination & Acid-Catalyzed Addition). [Link]
- Chemia. (2022). Active/inactive aromatic ring bromination: Bromination reactions that use NBS. [Link]

© 2026 BenchChem. All rights reserved.

- Google Patents. (1998).
- ResearchGate. (2025). Synthesis of Brominated Thiazoles via Sequential Bromination-Debromination Methods | Request PDF. [Link]
- Organic Syntheses Procedure. 2,4-Dimethylthiazole. [Link]
- ScienceDirect. (2025). Exploring Pyrazole integrated thiazole molecular hybrids for antitubercular activity. [Link]
- The Royal Society of Chemistry. (n.d.). C NMR spectra were measured on a Bruker AV400 (400MHz). [Link]
- Organic Chemistry Portal. (2007). Bromination of Deactivated Aromatics: A Simple and Efficient Method. [Link]
- Wiley Online Library. (2012). NMR spectroscopic characterization of new 2,3-dihydro-1,3,4-thiadiazole derivatives. [Link]
- PubChemLite. 5-(bromomethyl)-4-methyl-2-phenylthiazole. [Link]

Need Custom Synthesis?

BenchChem offers custom synthesis for rare earth carbides and specific isotopiclabeling.

Email: info@benchchem.com or Request Quote Online.

Sources

- 1. utoronto.scholaris.ca [utoronto.scholaris.ca]
- 2. Thiazole synthesis [organic-chemistry.org]
- 3. dpkmr.edu.in [dpkmr.edu.in]
- 4. N-Bromosuccinimide - Wikipedia [en.wikipedia.org]
- 5. masterorganicchemistry.com [masterorganicchemistry.com]
- 6. Allylic Bromination by NBS with Practice Problems - Chemistry Steps [chemistrysteps.com]

© 2026 BenchChem. All rights reserved.

- 7. chem.libretexts.org [chem.libretexts.org]
- 8. byjus.com [byjus.com]
- 9. savemyexams.com [savemyexams.com]
- 10. chemistry.ucr.edu [chemistry.ucr.edu]
- 11. US5750728A - Process for the preparation of aromatic bromomethyl compounds - Google Patents [patents.google.com]
- 12. rsc.org [rsc.org]
- 13. NMR spectroscopic characterization of new 2,3-dihydro-1,3,4-thiadiazole derivatives - PubMed [pubmed.ncbi.nlm.nih.gov]
- 14. PubChemLite - 5-(bromomethyl)-4-methyl-2-phenylthiazole (C11H10BrNS) [pubchemlite.lcsb.uni.lu]
- 15. store.apolloscientific.co.uk [store.apolloscientific.co.uk]
- 16. chemscience.com [chemscience.com]
- 17. merckmillipore.com [merckmillipore.com]
- 18. dept.harpercollege.edu [dept.harpercollege.edu]

- To cite this document: BenchChem. [Application Note & Detailed Protocol: Synthesis of 5-(Bromomethyl)-2,4-dimethylthiazole]. BenchChem, [2026]. [Online PDF]. Available at: [https://www.benchchem.com/product/b3246967/docs#application-note-detailed-protocol-synthesis-of-5-bromomethyl-2-4-dimethylthiazole]

Disclaimer & Data Validity:

The information provided in this document is for Research Use Only (RUO) and is strictly not intended for diagnostic or therapeutic procedures. While BenchChem strives to provide accurate protocols, we make no warranties, express or implied, regarding the fitness of this product for every specific experimental setup.

Technical Support: The protocols provided are for reference purposes. Unsure if this reagent suits your experiment?

Need Industrial/Bulk Grade? Request Custom Synthesis Quote

© 2026 BenchChem. All rights reserved.

BenchChem

Our mission is to be the trusted global source of essential and advanced chemicals, empowering scientists and researchers to drive progress in science and industry.

Contact

Address: 3281 E Guasti Rd

Ontario, CA 91761, United States

Phone: (601) 213-4426

Email: info@benchchem.com

Contact our Ph.D. Support Team for a compatibility check

© 2026 BenchChem. All rights reserved.