minimizing side products in reductive amination reactions

Author: BenchChem Technical Support Team. **Date**: April 2026

Compound of Interest

Compound Name:	*1-(3,5-Dimethoxyphenyl)piperidin-4-amine*
CAS No.:	*1016886-64-8*
Cat. No.:	*B3199531*

Get Quote

Technical Support Center: Reductive Amination Excellence

A Guide for Researchers, Scientists, and Drug Development Professionals

Welcome to the Technical Support Center. As a Senior Application Scientist, I've seen firsthand how the reductive amination reaction, a cornerstone of modern synthesis, can sometimes present challenges that lead to yield loss and purification headaches. This guide is structured as a series of frequently asked questions and troubleshooting scenarios to directly address the common pitfalls encountered in the lab. Our goal is to move beyond simple procedural lists and delve into the underlying chemical principles, empowering you to make informed decisions and optimize your reactions for clean, high-yield outcomes.

Understanding the Core Reaction & Common Pitfalls

© 2026 BenchChem. All rights reserved.

Reductive amination is a powerful method for synthesizing primary, secondary, and tertiary amines by reacting an aldehyde or ketone with an amine in the presence of a reducing agent.[1] The process typically involves the initial formation of a hemiaminal, which then reversibly loses water to form an imine or iminium ion.[1][2] This intermediate is then reduced to the target amine.[1][2]

While elegant, the reaction exists as a delicate equilibrium. Side reactions can and do occur, primarily stemming from the relative rates of imine formation versus the reduction of the starting materials or over-alkylation of the product. This guide will help you navigate these challenges.

Troubleshooting Guide & Frequently Asked Questions (FAQs)

Issue 1: My desired secondary amine is over-alkylating to a tertiary amine.

Question: I'm reacting a primary amine with an aldehyde, but I'm seeing a significant amount of the tertiary amine byproduct. How can I improve the selectivity for my desired secondary amine?

Answer: This is a classic challenge in reductive amination. The root cause is that the desired secondary amine product can often be more nucleophilic than the starting primary amine. This allows it to compete for the remaining aldehyde, forming a new iminium ion which is then reduced to the undesired tertiary amine.[3][4]

Causality & Mechanism: The direct alkylation of amines is notoriously difficult to control because the product of each step is often more reactive than the last.[4] Reductive amination is generally more controlled, but this issue can persist.[4]

Solutions & Protocols:

- Stoichiometry Control: The simplest approach is to use an excess of the primary amine (2 to 5 equivalents). By Le Châtelier's principle, this pushes the initial imine formation equilibrium forward and increases the statistical probability of the aldehyde reacting with the primary amine instead of the secondary amine product. This is particularly effective when the amine is inexpensive and easily removed post-reaction.

© 2026 BenchChem. All rights reserved.

- Stepwise Procedure: For valuable substrates or when over-alkylation is severe, a two-step protocol is highly effective.[5]
    - Protocol: Stepwise Imine Formation and Reduction
        1. Imine Formation: Dissolve the aldehyde (1.0 equiv) and the primary amine (1.0-1.1 equiv) in a suitable solvent like methanol or ethanol.
        2. Stir the mixture at room temperature for 1-4 hours. Monitor the formation of the imine by TLC, GC-MS, or NMR until the aldehyde is consumed.
        3. Reduction: Once imine formation is complete, cool the reaction to 0 °C and add a less selective, more powerful reducing agent like sodium borohydride ($NaBH_4$) portion-wise (1.5 equiv).[4]
        4. Work-up: After the reaction is complete, quench carefully with water, remove the organic solvent, and proceed with standard extraction.[3]
- Choice of Reducing Agent: Using a sterically bulky reducing agent can sometimes help. The larger hydride source may have a kinetic preference for the less hindered imine formed from the primary amine. Sodium triacetoxyborohydride ($NaBH(OAc)_3$) can sometimes offer better selectivity than smaller hydrides.[6][7]

Issue 2: My starting aldehyde/ketone is being reduced to an alcohol.

Question: My reaction is yielding a significant amount of the corresponding alcohol from my carbonyl starting material, and my amine is left unreacted. What is causing this and how do I fix it?

Answer: This side reaction occurs when the rate of carbonyl reduction by the hydride agent is faster than or competitive with the rate of imine/iminium ion formation and its subsequent reduction.[3][4] This is a clear indicator that your choice of reducing agent is not selective enough for the reaction conditions.

Causality & Mechanism: Strong reducing agents like sodium borohydride ($NaBH_4$) are fully capable of reducing aldehydes and ketones.[1] If imine formation is slow (due to sterically

© 2026 BenchChem. All rights reserved.

hindered reactants, poor nucleophilicity of the amine, or suboptimal pH), the $NaBH_4$ will simply reduce the most available electrophile: the starting carbonyl.

Solutions & Protocols:

- Switch to a Selective Reducing Agent: This is the most critical fix. You need a hydride source that is "kinetically tuned" to preferentially reduce the protonated imine (iminium ion) over the neutral carbonyl.
  - Sodium Triacetoxyborohydride ($NaBH(OAc)_3$, STAB): This is often the reagent of choice. The electron-withdrawing acetate groups moderate the hydride's reactivity, making it much slower to reduce aldehydes and ketones but highly effective for reducing iminium ions.[8][9] It is particularly useful for one-pot procedures.[8]
  - Sodium Cyanoborohydride ($NaBH_3CN$): This reagent is also highly selective for iminium ions at a controlled pH (typically 4-6).[10][11] However, due to the toxicity of cyanide byproducts, $NaBH(OAc)_3$ is often preferred.
- Optimize Reaction pH: Imine formation is catalyzed by mild acid, which protonates the carbonyl oxygen, making it more electrophilic.[11] However, if the pH is too low, the amine nucleophile will be protonated into its non-nucleophilic ammonium salt, shutting down the reaction.[3][4]
  - Protocol: One-Pot Reductive Amination with pH Control
    1. Combine the aldehyde or ketone (1.0 equiv) and the amine (1.1-1.2 equiv) in a suitable aprotic solvent like dichloromethane (DCM) or 1,2-dichloroethane (DCE).[3]
    2. Add a catalytic amount of acetic acid (0.1-0.2 equiv) to maintain a weakly acidic environment (pH ~5-6), which favors iminium ion formation.[3]
    3. Add sodium triacetoxyborohydride (1.5 equiv) to the mixture.
    4. Stir at room temperature and monitor by TLC or LC-MS until completion.
    5. Proceed with a standard aqueous work-up.

© 2026 BenchChem. All rights reserved.

Visualizing the Competing Pathways

The diagram below illustrates the critical decision point in the reaction. The desired pathway leads to the iminium ion and the final amine product, while the competing side reaction leads to the undesired alcohol.

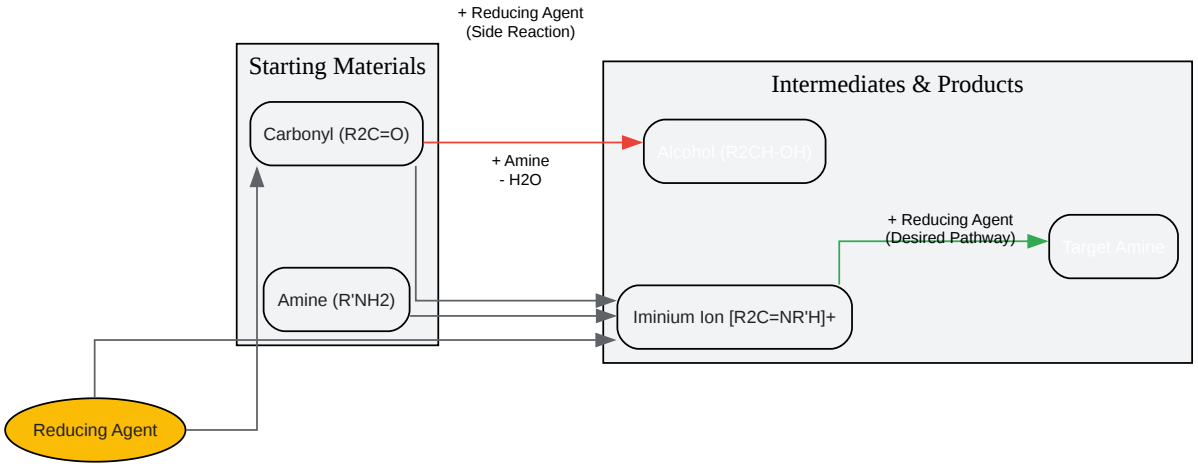

Click to download full resolution via product page

Caption: Competing reaction pathways in reductive amination.

Issue 3: I am observing homo-coupling of my aldehyde starting material.

Question: My reaction mixture contains a significant amount of a C-C coupled dimer of my starting aldehyde (a pinacol-type product). Why is this happening?

Answer: Reductive homo-coupling of aldehydes or ketones can occur under certain reductive conditions, especially with specific metal catalysts or reagents that can promote single-electron transfer (SET) pathways.[12] This generates radical intermediates that then dimerize. While less common with borohydride reagents, it can be a frustrating side reaction.

© 2026 BenchChem. All rights reserved.

Causality & Mechanism: This side reaction pathway involves the reduction of the carbonyl compound to a ketyl radical intermediate. Two of these radicals can then couple to form a pinacol-type product, which may be further reduced.[12] This is generally not the primary pathway for hydride reagents but can be favored by certain reaction conditions or impurities.

Solutions & Protocols:

- Re-evaluate the Reducing Agent: Ensure you are using a high-quality hydride reagent. Some older or improperly stored metal hydrides might contain impurities that facilitate this side reaction. Stick to well-established reagents like $NaBH(OAc)_3$ or $NaBH_3CN$.
- Control Temperature: These side reactions can sometimes be promoted at higher temperatures. Running the reaction at 0 °C or room temperature, rather than heating, can suppress the formation of these byproducts.
- Ensure an Acidic Catalyst is Present: The desired reductive amination pathway proceeds through an iminium ion, which is favored under mildly acidic conditions.[13] The homo-coupling is not necessarily acid-catalyzed. By adding a catalytic amount of acetic acid, you can accelerate the desired reaction, making it outcompete the undesired coupling pathway.

Data Summary: Choosing the Right Reducing Agent

The choice of reducing agent is arguably the most critical parameter for a successful reductive amination. The following table summarizes the properties of common reagents to guide your selection.

© 2026 BenchChem. All rights reserved.

Reducing Agent	Formula	Key Characteristics	Optimal Solvents	Common Issues
Sodium Borohydride	$NaBH_4$	Powerful, inexpensive, but not selective. Reduces aldehydes/ketones. Best for two-step procedures.[4][14]	Methanol, Ethanol	Reduces starting carbonyl, leading to alcohol byproduct.[4]
Sodium Cyanoborohydride	$NaBH_3CN$	Highly selective for iminium ions at pH 4-6. Stable in acidic and aqueous media.[1][10]	Methanol, THF	Toxic cyanide waste stream. Can sometimes lead to CN adducts.
Sodium Triacetoxyborohydride	$NaBH(OAc)_3$	Excellent selectivity for iminium ions. Mild, broad scope, and safer than $NaBH_3CN$.[8] Moisture sensitive.[3]	DCE, DCM, THF[14]	Decomposes in methanol.[9] Must be handled in anhydrous conditions.

Troubleshooting Workflow

When a reaction fails, a systematic approach is key. Use the following decision tree to diagnose the most likely issue.

© 2026 BenchChem. All rights reserved.

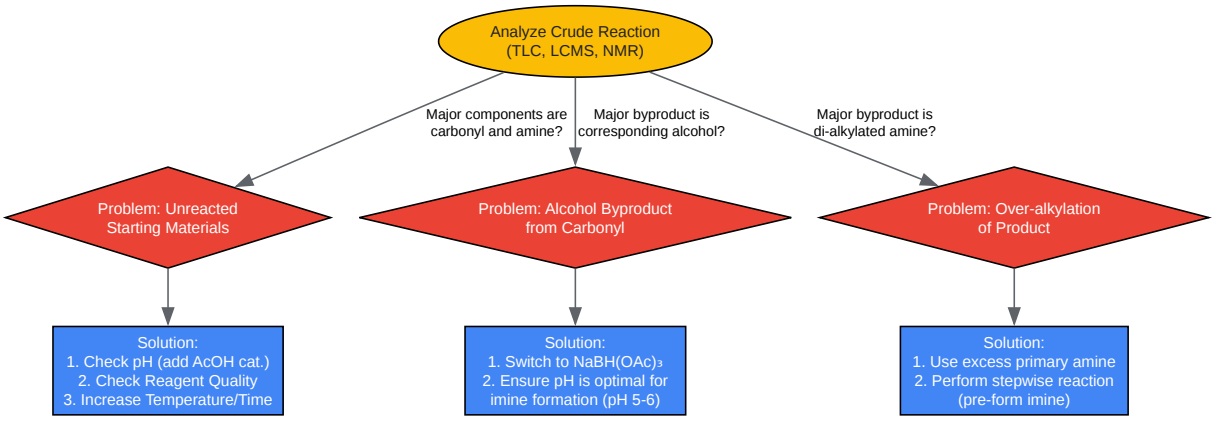

Click to download full resolution via product page

Caption: A decision tree for troubleshooting common reductive amination issues.

References

- Abdel-Magid, A. F., Carson, K. G., Harris, B. D., Maryanoff, C. A., & Shah, R. D. (1996). Use of Sodium Triacetoxyborohydride in Reductive Amination of Ketones and Aldehydes. The Journal of Organic Chemistry, 61(11), 3849–3862.
- Interchim. (n.d.). Sodium CyanoBoroHydride and Sodium BoroHydride. Retrieved from [Link]
- Wikipedia. (2023). Sodium triacetoxyborohydride. Retrieved from [Link]
- Chem-Station. (2014). Borch Reductive Amination. Retrieved from [Link]
- ResearchGate. (1996). ChemInform Abstract: Use of Sodium Triacetoxyborohydride in Reductive Amination of Ketones and Aldehydes. Retrieved from [Link]
- Google Patents. (n.d.). CA2248043A1 - Process of protecting a 1,2-aminoalcohol for reductive amination coupling.
- Ogo, S., Uehara, K., Abura, T., & Fukuzumi, S. (2004). pH-Dependent Chemoselective Synthesis of α-Amino Acids. Reductive Amination of α-Keto Acids with Ammonia Catalyzed

© 2026 BenchChem. All rights reserved.

by Acid-Stable Iridium Hydride Complexes in Water. Journal of the American Chemical Society, 126(10), 3020–3021.

- Ashenhurst, J. (2017). Reductive Amination, and How It Works. Master Organic Chemistry. Retrieved from [Link]
- Wikipedia. (2023). Reductive amination. Retrieved from [Link]
- Synple Chem. (n.d.). Application Note – Reductive Amination. Retrieved from [Link]
- American Chemical Society. (2019). Reductive Coupling between Aromatic Aldehydes and Ketones or Imines by Copper Catalysis. Retrieved from [Link]
- Indian Academy of Sciences. (1998). Reductive alkylation of aniline over copper chromite catalyst: Optimization of reaction condition. Retrieved from [Link]
- Organic Chemistry Portal. (n.d.). Amine synthesis by reductive amination (reductive alkylation). Retrieved from [Link]
- Chemistry Steps. (2024). Reductive Amination. Retrieved from [Link]
- Organic Chemistry Data. (n.d.). Reductive Amination - Common Conditions. Retrieved from [Link]
- Chemistry LibreTexts. (2025). 24.6: Synthesis of Amines. Retrieved from [Link]
- ResearchGate. (n.d.). Applications of the deoxygenative aldehyde/ketone homo-coupling. Retrieved from [Link]
- National Center for Biotechnology Information. (2026). Alcohol Oxidase–Imine Reductase Cascade for One-Pot Chiral Amine Synthesis. Retrieved from [Link]
- MDPI. (2023). The Acquisition of Primary Amines from Alcohols through Reductive Amination over Heterogeneous Catalysts. Retrieved from [Link]
- Sciencemadness.org. (2019). Conditions for reductive amination. Retrieved from [Link]

© 2026 BenchChem. All rights reserved.

- American Chemical Society. (2019). Reductive Coupling between Aromatic Aldehydes and Ketones or Imines by Copper Catalysis. Retrieved from [Link]

Need Custom Synthesis?

BenchChem offers custom synthesis for rare earth carbides and specific isotopiclabeling.

Email: info@benchchem.com or Request Quote Online.

Sources

- 1. Reductive amination - Wikipedia [en.wikipedia.org]
- 2. chem.libretexts.org [chem.libretexts.org]
- 3. pdf.benchchem.com [pdf.benchchem.com]
- 4. masterorganicchemistry.com [masterorganicchemistry.com]
- 5. Amine synthesis by reductive amination (reductive alkylation) [organic-chemistry.org]
- 6. pubs.acs.org [pubs.acs.org]
- 7. researchgate.net [researchgate.net]
- 8. interchim.fr [interchim.fr]
- 9. Sodium triacetoxyborohydride - Wikipedia [en.wikipedia.org]
- 10. Borch Reductive Amination | Chem-Station Int. Ed. [en.chem-station.com]
- 11. alfa-chemistry.com [alfa-chemistry.com]
- 12. pubs.acs.org [pubs.acs.org]
- 13. pubs.acs.org [pubs.acs.org]
- 14. Reductive Amination - Common Conditions [commonorganicchemistry.com]
- To cite this document: BenchChem. [minimizing side products in reductive amination reactions]. BenchChem, [2026]. [Online PDF]. Available at: [https://www.benchchem.com/product/b3199531/docs#minimizing-side-products-in-reductive-amination-reactions]

Disclaimer & Data Validity:

The information provided in this document is for Research Use Only (RUO) and is strictly not intended for diagnostic or therapeutic procedures. While BenchChem strives to provide accurate protocols, we make no warranties, express or implied, regarding the fitness of this product for every specific experimental setup.

Technical Support: The protocols provided are for reference purposes. Unsure if this reagent suits your experiment?

Need Industrial/Bulk Grade? Request Custom Synthesis Quote

BenchChem

Our mission is to be the trusted global source of essential and advanced chemicals, empowering scientists and researchers to drive progress in science and industry.

Contact

Address: 3281 E Guasti Rd

Ontario, CA 91761, United States

Phone: (601) 213-4426

Email: info@benchchem.com

Contact our Ph.D. Support Team for a compatibility check

© 2026 BenchChem. All rights reserved.