Optimizing Amoitone B dosage to minimize off-target effects

Author: BenchChem Technical Support Team. **Date**: April 2026

Compound of Interest	
Compound Name:	*Amoitone B*
CAS No.:	*1257228-26-4*
Cat. No.:	*B3186576*

Get Quote

Amoitone B Technical Support Center

Welcome to the technical support center for **Amoitone B**. This resource is designed to assist researchers, scientists, and drug development professionals in optimizing the dosage of **Amoitone B** to minimize off-target effects and ensure experimental success.

Frequently Asked Questions (FAQs)

Q1: What is the recommended starting concentration for **Amoitone B** in cell-based assays?

A1: For initial experiments, we recommend a starting concentration range of 10 nM to 1 µM. This range is based on the known high-affinity binding of **Amoitone B** to its primary target, Kinase X. A dose-response experiment is crucial to determine the optimal concentration for your specific cell line and experimental conditions.

Q2: How can I determine if the observed cellular phenotype is due to on-target or off-target effects of **Amoitone B**?

© 2026 BenchChem. All rights reserved.

A2: To distinguish between on-target and off-target effects, we recommend a multi-pronged approach:

- Rescue Experiments: Perform a rescue experiment by overexpressing a drug-resistant mutant of the primary target (Kinase X). If the phenotype is rescued, it is likely an on-target effect.
- Use of Structurally Unrelated Inhibitors: Compare the phenotype induced by **Amoitone B** with that of other known inhibitors of Kinase X that are structurally different.
- Target Knockdown/Knockout: Use siRNA, shRNA, or CRISPR/Cas9 to reduce or eliminate the expression of the primary target. If the phenotype is recapitulated, it confirms an on-target effect.

Q3: What are the known off-targets of **Amoitone B** and at what concentrations do these effects become apparent?

A3: **Amoitone B** exhibits high selectivity for its primary target, Kinase X. However, at concentrations exceeding 5 µM, off-target activity against a panel of related kinases has been observed. The table below summarizes the IC50 values for **Amoitone B** against its primary target and key off-targets.

Troubleshooting Guide

Issue 1: High levels of cytotoxicity observed even at low concentrations of **Amoitone B**.

- Possible Cause 1: Cell line sensitivity. Your cell line may be particularly sensitive to the inhibition of the Kinase X pathway or may express higher levels of off-targets.
    - Solution: Perform a dose-response curve starting from a much lower concentration (e.g., 0.1 nM) to determine the EC50 for cytotoxicity. Compare this with the EC50 for target inhibition to identify a potential therapeutic window.
- Possible Cause 2: Solvent toxicity. The solvent used to dissolve **Amoitone B** (e.g., DMSO) may be causing cytotoxicity.

© 2026 BenchChem. All rights reserved.

- Solution: Ensure the final concentration of the solvent in your culture medium is below a toxic threshold (typically <0.1% for DMSO). Run a vehicle-only control to assess solvent toxicity.

Issue 2: Inconsistent results between experimental replicates.

- Possible Cause 1: **Amoitone B** instability. **Amoitone B** may be unstable in your experimental medium or sensitive to light.
  - Solution: Prepare fresh dilutions of **Amoitone B** for each experiment from a frozen stock. Minimize exposure of the compound to light and prolonged incubation at room temperature.
- Possible Cause 2: Cell passage number. The phenotype or response to **Amoitone B** may vary with cell passage number.
  - Solution: Use cells within a consistent and narrow passage number range for all experiments.

Data Presentation

Table 1: In Vitro Kinase Inhibitory Profile of **Amoitone B**

Kinase Target	IC50 (nM)
Kinase X (Primary Target)	15
Kinase Y (Off-Target)	1,200
Kinase Z (Off-Target)	3,500
Kinase A (Off-Target)	>10,000

Table 2: Dose-Response of **Amoitone B** on Cell Viability and Target Inhibition

© 2026 BenchChem. All rights reserved.

Amoitone B (μM)	% Target Inhibition	% Cell Viability
0.01	5	98
0.1	45	95
1	92	88
5	98	65
10	99	40

Experimental Protocols

Protocol 1: Determining the IC50 of **Amoitone B** using a Cell-Based Assay

- Cell Seeding: Seed cells in a 96-well plate at a density of 5,000-10,000 cells per well and allow them to adhere overnight.
- Compound Preparation: Prepare a 10 mM stock solution of **Amoitone B** in DMSO. Perform a serial dilution to create a range of concentrations (e.g., 10 μM to 0.1 nM).
- Treatment: Treat the cells with the different concentrations of **Amoitone B**. Include a vehicle-only control (DMSO) and an untreated control.
- Incubation: Incubate the cells for the desired treatment duration (e.g., 24, 48, or 72 hours).
- Viability Assay: Add a cell viability reagent (e.g., CellTiter-Glo®) to each well and measure the luminescence according to the manufacturer's protocol.
- Data Analysis: Normalize the data to the vehicle control and plot the results as a dose-response curve to calculate the IC50 value.

Visualizations

© 2026 BenchChem. All rights reserved.

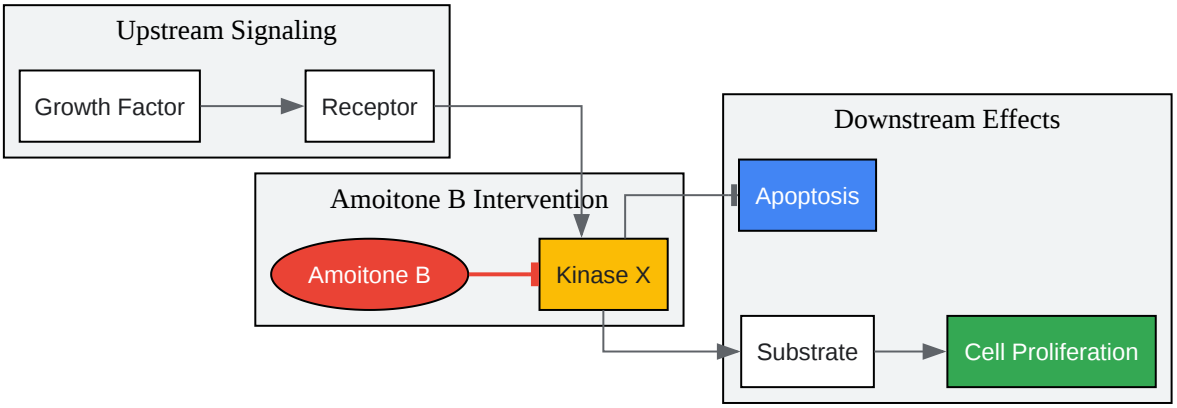

Click to download full resolution via product page

Caption: **Amoitone B** inhibits Kinase X, blocking downstream signaling for cell proliferation.

© 2026 BenchChem. All rights reserved.

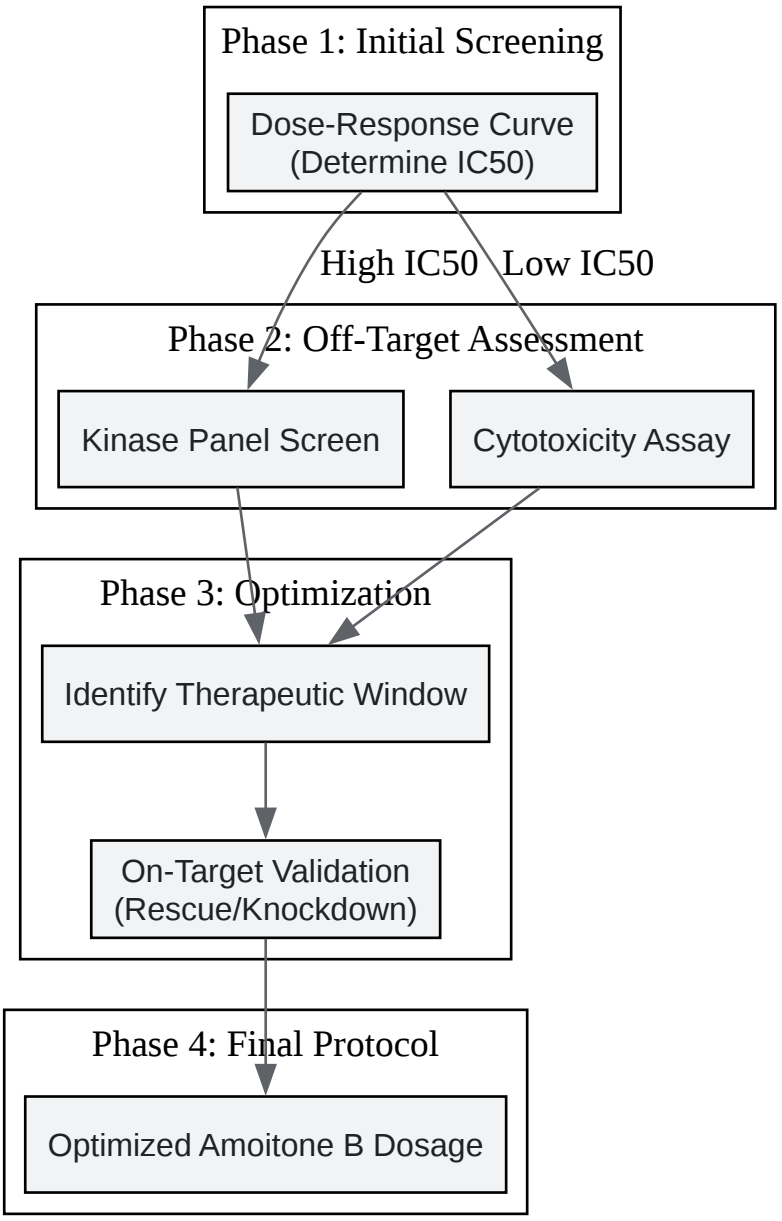

© 2026 BenchChem. All rights reserved.

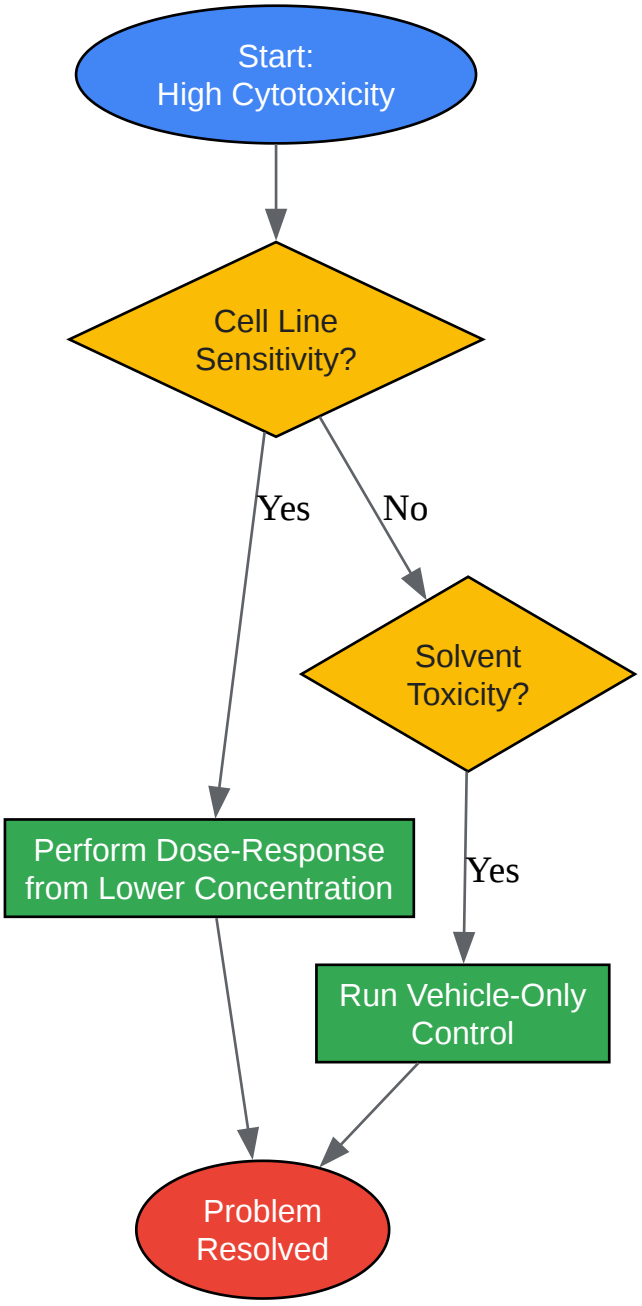

Click to download full resolution via product page

- To cite this document: BenchChem. [Optimizing Amoitone B dosage to minimize off-target effects]. BenchChem, [2026]. [Online PDF]. Available at: [https://www.benchchem.com/product/b3186576/docs#optimizing-amoitone-b-dosage-to-minimize-off-target-effects]

Disclaimer & Data Validity:

© 2026 BenchChem. All rights reserved.

The information provided in this document is for Research Use Only (RUO) and is strictly not intended for diagnostic or therapeutic procedures. While BenchChem strives to provide accurate protocols, we make no warranties, express or implied, regarding the fitness of this product for every specific experimental setup.

Technical Support: The protocols provided are for reference purposes. Unsure if this reagent suits your experiment?

Need Industrial/Bulk Grade? Request Custom Synthesis Quote

BenchChem

Our mission is to be the trusted global source of essential and advanced chemicals, empowering scientists and researchers to drive progress in science and industry.

Contact

Address: 3281 E Guasti Rd

Ontario, CA 91761, United States

Phone: (601) 213-4426

Email: info@benchchem.com

Contact our Ph.D. Support Team for a compatibility check

© 2026 BenchChem. All rights reserved.