Application Note: Pd/(R)-Xyl-SDP Catalyst System for Asymmetric Hydrogenation

Author: BenchChem Technical Support Team. **Date**: April 2026

Compound of Interest

Compound Name:	*(R)-Xyl-SDP*
CAS No.:	*917377-75-4*
Cat. No.:	*B3182573*

Get Quote

Executive Summary

The Pd/**(R)-Xyl-SDP** system represents a pinnacle in "privileged" chiral catalyst design.[1] Utilizing the rigid spiro-biindane backbone of the SDP ligand family combined with the steric bulk of 3,5-xylyl groups, this system offers exceptional enantioselectivity (>99% ee) for the asymmetric hydrogenation of sterically hindered substrates, particularly ngcontent-ng-c2699131324="" _nghost-ng-c2339441298="" class="inline ng-star-inserted">

-sulfonyl imines and ketones.

Unlike atropisomeric ligands (e.g., BINAP) which rely on axial chirality, **(R)-Xyl-SDP** utilizes spiro-chirality.[1] This confers higher structural rigidity, preventing "ligand breathing" during the catalytic cycle and ensuring tighter transfer of chiral information to the substrate.

Mechanism & Rationale

To successfully deploy this catalyst, one must understand the Spiro-Steric Effect.

- The Backbone: The 1,1'-spirobiindane backbone is non-racemizable and highly rigid.[1]

© 2026 BenchChem. All rights reserved.

- The "Xyl" Group: The 3,5-dimethylphenyl (xylyl) groups on the phosphorus atoms create a deep, narrow chiral pocket.[1] This is critical for substrates like cyclic imines where standard phenyl-based ligands (e.g., (R)-SDP) fail to provide sufficient steric discrimination.[1]

Visualization: Mechanistic Logic

The following diagram illustrates the critical decision pathway for selecting this specific ligand system over generic alternatives.

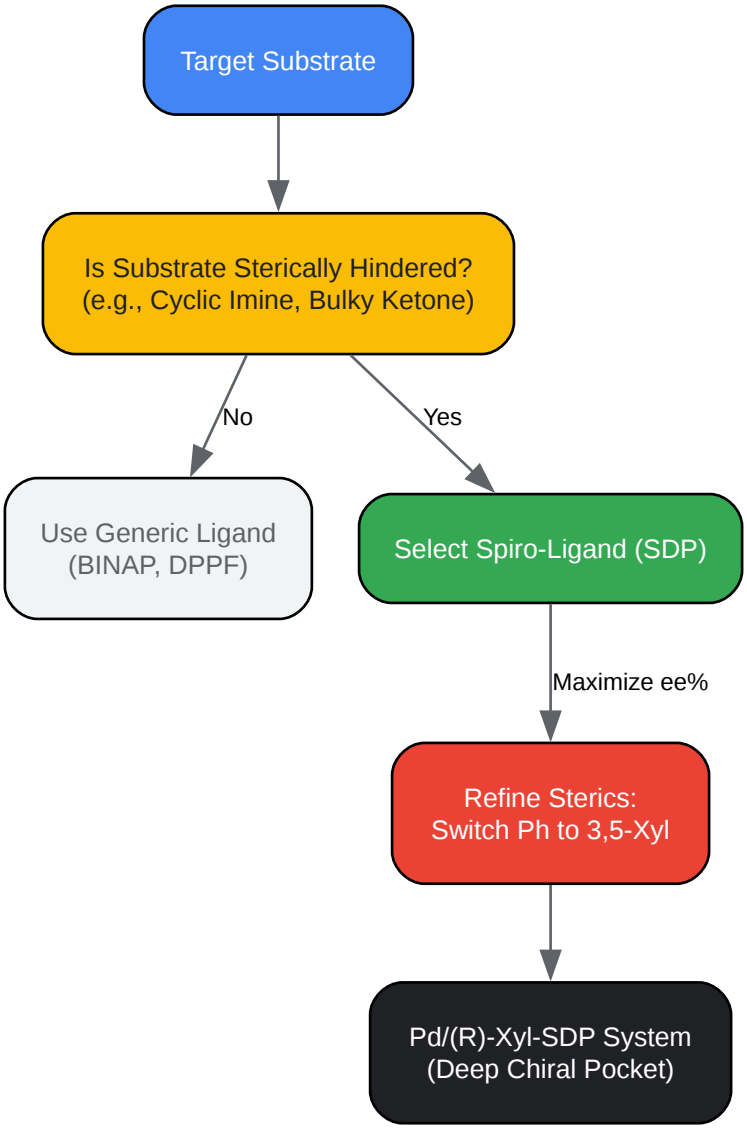

Click to download full resolution via product page

Caption: Decision matrix for selecting Xyl-modified Spiro ligands based on substrate sterics.

© 2026 BenchChem. All rights reserved.

Materials & Equipment ("Mise-en-place")

Reagents

Component	Specification	Role
Ligand	(R)-Xyl-SDP (>98%)	Chiral Source.[1][2] CAS: 917377-75-4.[1][2][3][4]
Precursor	$Pd(OAc)_2$ or $Pd(TFA)_2$	Palladium source.[1][5] Acetate is standard; Trifluoroacetate for lower reactivity substrates.[1]
Solvent A	TFE (2,2,2-Trifluoroethanol)	Critical.[1] Promotes hydride formation and stabilizes ionic intermediates.[1]
Solvent B	DCM (Dichloromethane)	Co-solvent for solubility.[1] Must be anhydrous/degassed.[1]
Gas	Hydrogen (H_2)	Grade 5.0 (99.999%).[1]

Equipment

- Glovebox (Argon atmosphere) or Schlenk line.[1]
- High-Pressure Reactor (Autoclave) capable of 50–100 bar (approx. 700–1450 psi).[1]
- Glass Liners for the autoclave (prevents metal leaching from the reactor walls).[1]

Protocol: In-Situ Catalyst Generation

Note: While isolated Pd-SDP complexes can be synthesized, the in-situ generation is operationally simpler and equally effective for hydrogenation applications.[1]

Step 1: Preparation of Stock Solutions (Inside Glovebox)

- Ligand Solution: Dissolve **(R)-Xyl-SDP** (7.0 mg, 0.01 mmol) in 1.0 mL of anhydrous DCM.
  - Observation: Solution should be clear and colorless.[1]

© 2026 BenchChem. All rights reserved.

- Metal Solution: Dissolve $Pd(OAc)_2$ (2.2 mg, 0.01 mmol) in 1.0 mL of anhydrous DCM/TFE (1:1 mixture).
  - Observation: Solution will be orange-brown.[1]

Step 2: Complexation

- Add the Ligand Solution slowly to the Metal Solution.[1]
- Stir at room temperature (25°C) for 30–60 minutes.
  - Critical Checkpoint: The color often shifts from orange-brown to a lighter yellow or pale orange.[1] This indicates the coordination of the phosphine to the palladium center.
  - Stoichiometry: Maintain a ratio of 1:1.1 (Pd:Ligand). A slight excess of ligand protects the Pd center from aggregating into inactive Pd-black.[1]

Protocol: Asymmetric Hydrogenation of -Sulfonyl Imines

Target Application: Synthesis of Chiral Sultams or Amines.[1]

Workflow Diagram

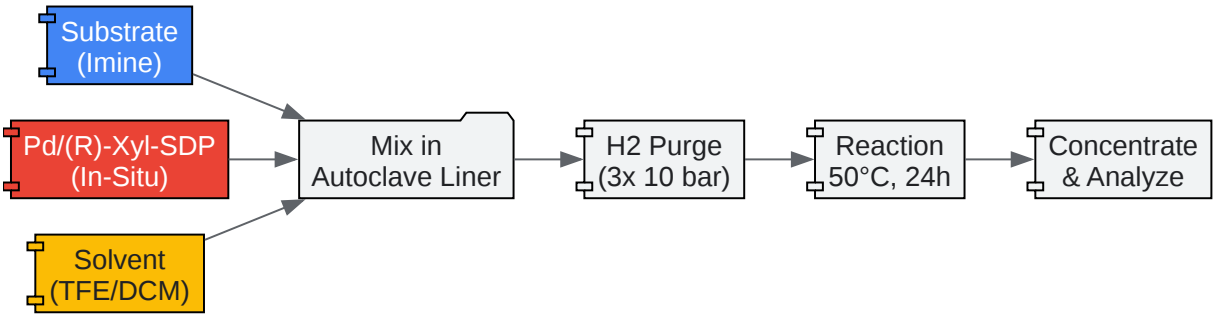

Click to download full resolution via product page

Caption: Operational workflow for high-pressure asymmetric hydrogenation.

© 2026 BenchChem. All rights reserved.

Detailed Procedure

- Substrate Loading: In a glass liner equipped with a magnetic stir bar, weigh out the substrate (e.g., cyclic ngcontent-ng-c2699131324="" _nghost-ng-c2339441298="" class="inline ng-star-inserted">

  -sulfonyl imine) (1.0 mmol).

- Catalyst Addition: Add the pre-formed Pd/**(R)-Xyl-SDP** solution (prepared in Section 4) to the liner.[1]
  - S/C Ratio: Aim for a Substrate-to-Catalyst ratio of 100:1 to 1000:1 depending on substrate difficulty.[1] For initial screening, use 100:1 (1 mol% Pd).[1]
- Solvent Adjustment: Add additional solvent (TFE or DCM/TFE mixture) to reach a total volume of 3.0–4.0 mL.[1]
  - Note: TFE is often essential for high activity in Pd-catalyzed imine reduction due to its hydrogen-bond donating ability.[1]
- Pressurization:
  - Place the liner into the autoclave.
  - Seal and purge with H_2 gas (pressurize to 10 bar, release) three times to remove all N_2/O_2.[1]
  - Charge the reactor to 600 psi (approx. 40 bar) H_2.
- Reaction: Stir at 50°C for 20–24 hours.
- Workup:
  - Carefully vent the H_2 gas (in a fume hood).[1]
  - Concentrate the solution under reduced pressure.[1]
  - Analyze directly via ^{1}H NMR (conversion) and HPLC (chiral column) for enantiomeric excess (ee).

© 2026 BenchChem. All rights reserved.

Quality Control & Troubleshooting

Self-Validating Checks

Observation	Diagnosis	Corrective Action
Precipitate (Black)	Pd-Black formation (Catalyst decomposition).[1]	Oxygen ingress or insufficient Ligand:Pd ratio.[1] Ensure strict degassing and use 1.1 eq of ligand.
No Conversion	Catalyst poisoning or substrate inhibition.[1]	Check substrate purity (remove halides/thiols).[1] Increase temperature to 60°C.
Low ee% (<50%)	Racemization or wrong ligand choice.	Confirm (R)-Xyl-SDP structure. Ensure temperature is not too high (>80°C can erode ee).[1]
Slow Reaction	Solvent effect.[1][6][7]	Increase the proportion of TFE (Trifluoroethanol). TFE activates the imine via H-bonding.[1]

Analytical Verification[1][8]

- ^{1}H NMR: Check for the disappearance of the imine signal (

  8.0–9.0 ppm) and appearance of the methine proton (

  to nitrogen).

- Chiral HPLC: Use a Daicel Chiralcel OD-H or AD-H column.[1] **(R)-Xyl-SDP** usually yields the (R)-amine (check specific literature for your substrate class).[1]

Safety Information

- **(R)-Xyl-SDP**: Classified as an irritant.[1] Handle in a glovebox or well-ventilated hood to prevent inhalation of phosphine dust.[1]

- Palladium Salts: Toxic if ingested.[1]

© 2026 BenchChem. All rights reserved.

- High Pressure Hydrogen:Explosion Hazard. Ensure autoclave is rated for the pressure used.[1] Check burst discs and seals before every run.[1] Ground the equipment to prevent static discharge.[1]

References

- Ligand Origin & Synthesis
  - Xie, J.-H., Zhou, Q.-L., et al. "Synthesis of Spiro Diphosphine Ligands and Their Application in Asymmetric Hydrogenation of Ketones."[1][8] J. Am. Chem. Soc.[1]2003, 125, 4404.[1]
- Pd-Catalyzed Imine Hydrogenation
  - Zhou, Y.-G., et al. "Palladium-Catalyzed Asymmetric Hydrogenation of N-Tosylimines."[1] Org.[1][5] Lett.2006, 8, 1479.[1]
- Review of Spiro Ligands
  - Ding, K., Han, Z., & Wang, Z.[1] "Spiro Ligands for Asymmetric Catalysis." Chem. Commun.[1]2012, 48, 12204.[1]

Disclaimer: This protocol is intended for use by qualified research personnel. Always consult the Safety Data Sheet (SDS) for specific chemicals before use.

Need Custom Synthesis?

BenchChem offers custom synthesis for rare earth carbides and specific isotopiclabeling.

Email: info@benchchem.com or Request Quote Online.

Sources

- 1. (R)-Xyl-SDP | C49H50P2 | CID 11309256 - PubChem [pubchem.ncbi.nlm.nih.gov]
- 2. chemscene.com [chemscene.com]
- 3. (R)-Xyl-SDP | Sigma-Aldrich [sigmaaldrich.com]
- 4. (R)-XYL-SDP | 917377-75-4 [m.chemicalbook.com]

© 2026 BenchChem. All rights reserved.

- 5. researchgate.net [researchgate.net]
- 6. Organic Syntheses Procedure [orgsyn.org]
- 7. pubs.acs.org [pubs.acs.org]
- 8. Ru(II)-SDP-complex-catalyzed asymmetric hydrogenation of ketones. Effect of the alkali metal cation in the reaction - PubMed [pubmed.ncbi.nlm.nih.gov]
- To cite this document: BenchChem. [Application Note: Pd/(R)-Xyl-SDP Catalyst System for Asymmetric Hydrogenation]. BenchChem, [2026]. [Online PDF]. Available at: [https://www.benchchem.com/product/b3182573/docs#application-note-pd-r-xyl-sdp-catalyst-system-for-asymmetric-hydrogenation]

Disclaimer & Data Validity:

The information provided in this document is for Research Use Only (RUO) and is strictly not intended for diagnostic or therapeutic procedures. While BenchChem strives to provide accurate protocols, we make no warranties, express or implied, regarding the fitness of this product for every specific experimental setup.

Technical Support: The protocols provided are for reference purposes. Unsure if this reagent suits your experiment?

Need Industrial/Bulk Grade? Request Custom Synthesis Quote

BenchChem

Our mission is to be the trusted global source of essential and advanced chemicals, empowering scientists and researchers to drive progress in science and industry.

Contact

Address: 3281 E Guasti Rd

Ontario, CA 91761, United States

Phone: (601) 213-4426

Email: info@benchchem.com

© 2026 BenchChem. All rights reserved.

Contact our Ph.D. Support Team for a compatibility check

© 2026 BenchChem. All rights reserved.