Technical Support Center: O-Alkylation Optimization & Catalyst Selection

Author: BenchChem Technical Support Team. **Date**: February 2026

Compound of Interest		
Compound Name:	*2-[(4-Bromobenzyl)oxy]-3-methoxybenzoic acid*	
CAS No.:	*938330-03-1*	
Cat. No.:	*B3169911*	*Get Quote*

Mission: To provide high-fidelity troubleshooting and experimental design strategies for researchers facing bottlenecks in ether synthesis. This guide moves beyond basic textbook definitions to address causality, kinetic barriers, and chemoselectivity in complex drug discovery scaffolds.

Module 1: The Williamson Ether Synthesis & Phase Transfer Catalysis (PTC)

Context: Standard SN2 reactions often fail due to the "Solubility Paradox"—the nucleophile (alkoxide salt) acts best in polar solvents, while the electrophile (alkyl halide) prefers non-polar organic media.

Troubleshooting Guide

Q: My reaction yields are <20% in biphasic media (e.g., Toluene/Water). I am using NaOH. A: You are likely experiencing poor interfacial transfer. The alkoxide is trapped in the aqueous phase.

- The Fix: Introduce a Phase Transfer Catalyst (PTC) to shuttle the anion into the organic layer as a lipophilic ion pair.
- Catalyst Selection:

© 2026 BenchChem. All rights reserved.

- Tetrabutylammonium Iodide (TBAI): Best for alkyl chlorides/bromides. The iodide acts as a nucleophilic catalyst (Finkelstein-type in situ exchange), converting the sluggish alkyl chloride to a reactive alkyl iodide.
- Tetrabutylammonium Hydrogen Sulfate (TBAHS): Use this if your substrate is sensitive to iodide oxidation or if you need a "cleaner" non-nucleophilic counter-ion.

Q: I am using solid KOH in THF, but the reaction is stalling. A: The lattice energy of solid KOH is too high to be overcome by THF solvation alone. You need a Crown Ether to sequester the cation, generating a "naked," highly reactive alkoxide anion.

- The Fix: Match the cavity size of the crown ether to the cation diameter. Mismatching leads to negligible catalytic turnover.

Data Table 1: Crown Ether Selection Matrix

Cation	Ionic Radius (Å)	Recommended Catalyst	Cavity Size (Å)	Solvent Compatibility
Li^+	0.60	12-Crown-4	1.2 - 1.5	THF, DME
Na^+	0.95	15-Crown-5	1.7 - 2.2	THF, Dioxane, DCM
K^+	1.33	18-Crown-6	2.6 - 3.2	Benzene, Acetonitrile
Cs^+	1.69	Benzo-21-Crown-7	3.4 - 4.3	DMF, DMSO

Visualization: PTC Mechanism

Caption: The catalytic cycle showing the transfer of the alkoxide anion (RO-) from the aqueous phase to the organic phase by the quaternary ammonium catalyst (Q+), enabling reaction with the alkyl halide (R'X).

© 2026 BenchChem. All rights reserved.

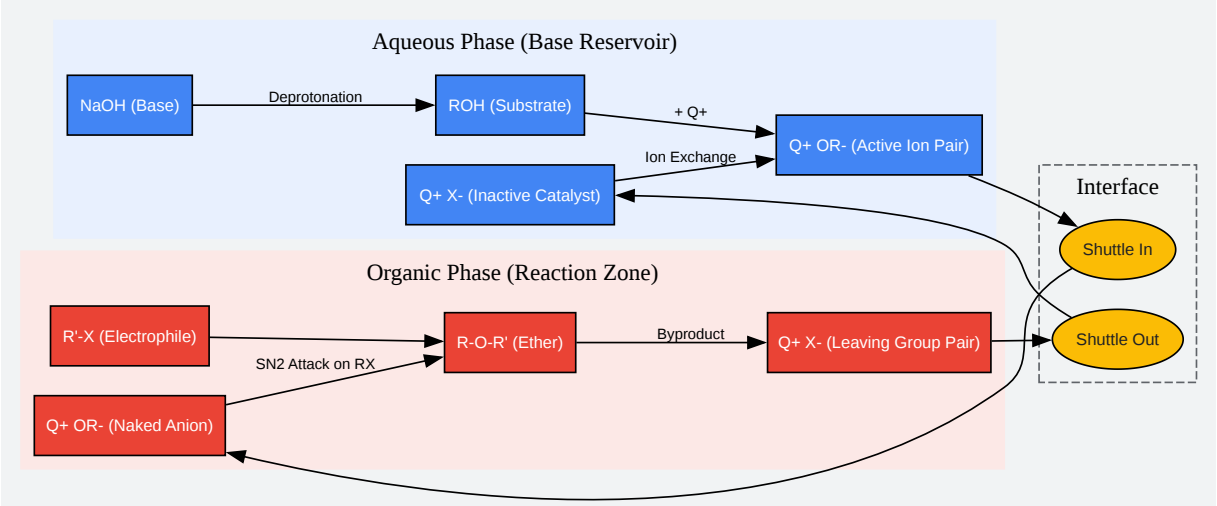

Click to download full resolution via product page

Module 2: Regioselectivity (Ambident Nucleophiles)

Context: Phenols and enolates can react at either the Oxygen (O-alkylation) or the Carbon (C-alkylation).[1][2] Controlling this is a matter of Hard-Soft Acid-Base (HSAB) theory.

Troubleshooting Guide

Q: I am trying to O-alkylate a phenol, but I am seeing significant C-alkylation (ortho/para substitution). A: You are likely using a protic solvent or a cation that coordinates tightly to the oxygen.

- The Mechanism: Protic solvents (MeOH, H_2O) hydrogen bond to the phenoxide oxygen, shielding it.[2] This forces the electrophile to attack the "softer," unshielded carbon ring (C-alkylation).
- The Fix (Solvent): Switch to Polar Aprotic Solvents (DMF, DMSO, NMP). These solvate the cation but leave the oxygen anion "naked" and highly reactive (Hard Nucleophile), favoring O-attack.

© 2026 BenchChem. All rights reserved.

- The Fix (Leaving Group): Use "Hard" leaving groups like Tosylate (OTs) or Mesylate (OMs) to favor O-alkylation. "Soft" leaving groups like Iodide can sometimes encourage C-alkylation via orbital control.

Q: How do I force O-alkylation on a β-naphthol? A: β-naphthols are notorious for C-alkylation.

- Protocol Adjustment: Use Cs_2CO_3 in Acetone or DMF. Cesium (Cs^+) is a large, "soft" cation that forms a loose ion pair with the phenoxide, allowing the oxygen to act as the nucleophile freely. Avoid Li^+ or Na^+, which coordinate tightly to the oxygen and can direct the electrophile to the carbon via a chelation transition state.

Module 3: Metal-Catalyzed O-Arylation (Buchwald-Hartwig Type)

Context: When the electrophile is an aryl halide, SN2 is impossible. You must use Palladium or Copper catalysis.

Troubleshooting Guide

Q: I need to couple a primary alcohol with an aryl bromide. Standard $Pd(PPh_3)_4$ failed. A: Standard triphenylphosphine ligands are insufficient for C-O bond reductive elimination.[3] The Pd-O bond is strong and requires bulky, electron-rich ligands to force the product off the metal center.

- Catalyst Recommendation: Use RockPhos or tBuBrettPhos precatalysts (Gen 3/Gen 4).
  - Why? These bulky biaryl phosphine ligands facilitate the difficult reductive elimination step of the ether product.
- Base Selection: Use Cs_2CO_3 (weaker) for phenols, but NaOtBu (stronger) is often required for aliphatic alcohols to generate the alkoxide in situ.

Protocol: Pd-Catalyzed Cross-Coupling (RockPhos System)

- Charge: Aryl halide (1.0 equiv), Alcohol (1.2 equiv), Cs_2CO_3 (1.5 equiv).
- Catalyst: Add [(RockPhos)Pd(allyl)]Cl (2 mol%).

© 2026 BenchChem. All rights reserved.

- Solvent: Toluene (anhydrous).
- Conditions: Heat to 90°C under Argon for 12-18h.
- Note: If the substrate is sterically hindered, switch to tBuBrettPhos.[4]

Visualization: Catalyst Decision Tree

Caption: Logic flow for selecting the correct catalytic system based on electrophile nature and nucleophile acidity.

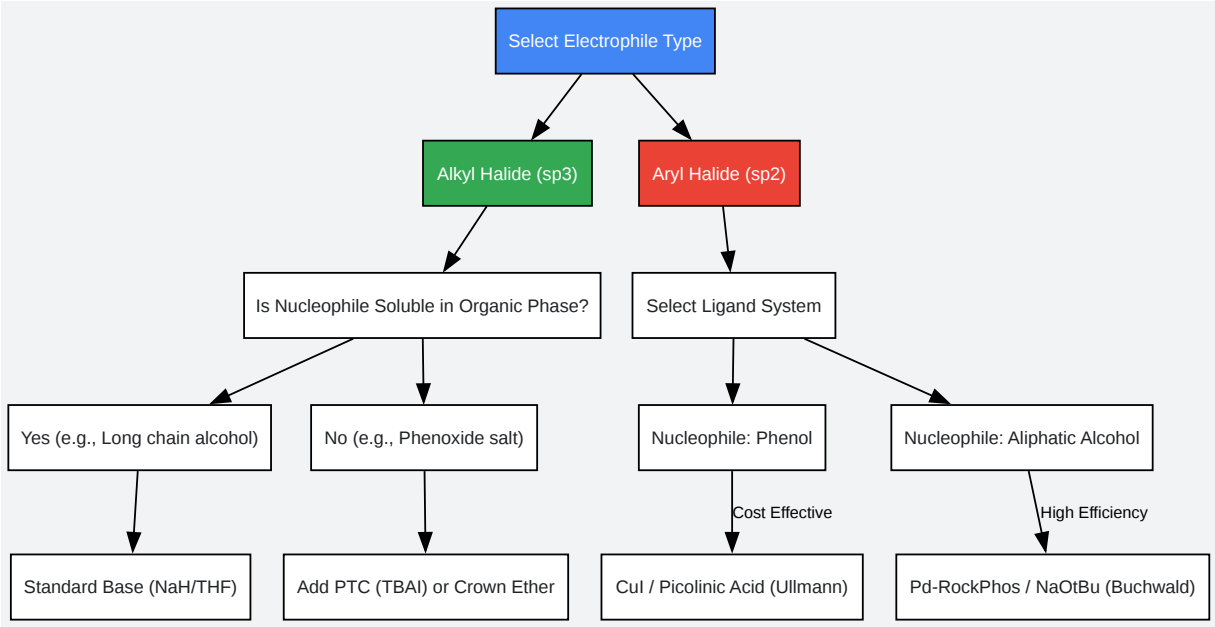

Click to download full resolution via product page

Module 4: The Mitsunobu Reaction (Dehydration)

Context: Converting an alcohol (R-OH) directly to an ether using a phenol (Ar-OH) without pre-activation of the alcohol.

© 2026 BenchChem. All rights reserved.

Troubleshooting Guide

Q: My Mitsunobu reaction yields 0% product. The phenol is electron-rich (e.g., 4-methoxyphenol). A: This is a pKa issue.[5][6] The standard Mitsunobu reagent (DEAD/DIAD) requires the pronucleophile (phenol) to have a pKa < 11 (ideally < 10) to protonate the betaine intermediate.

- The Fix: Switch to ADDP (1,1'-(azodicarbonyl)dipiperidine) and PBu_3 (Tributylphosphine).
  - Why? The ADDP-derived betaine is more basic and can deprotonate less acidic phenols (pKa 11-13).

Q: I see hydrazine byproduct contamination. A: This is common with DEAD.

- The Fix: Use DIAD (Diisopropyl azodicarboxylate). The hydrazine byproduct is more soluble in hexane/ether, making it easier to filter off or separate via column chromatography compared to the DEAD byproduct.

References

- Williamson Ether Synthesis & PTC Mechanisms
  - Wikipedia: Williamson ether synthesis. (Accessed 2025).[6][7][8] Overview of SN2 mechanisms and phase transfer catalysis. Link
  - BenchChem: Protocol for Williamson Ether Synthesis using Phase Transfer Catalysis. Detailed experimental setups for biphasic systems. Link
- Regioselectivity (O- vs C-Alkylation)
  - PharmaXChange: Phenolates - O-alkylation and C-alkylation.[2][8] Explanation of solvent effects and counter-ion influence on ambident nucleophiles. Link
  - ResearchGate: Alkylation of Phenol: A Mechanistic View. Theoretical underpinnings of kinetic vs thermodynamic control in phenol alkylation. Link
- Buchwald-Hartwig O-Arylation

© 2026 BenchChem. All rights reserved.

- Sigma-Aldrich: Buchwald Catalysts & Ligands. Guide to ligand selection (RockPhos, tBuBrettPhos) for C-O coupling. Link
- Chemistry LibreTexts: Buchwald-Hartwig Amination (and Etherification). Mechanisms of reductive elimination and ligand design. Link

- Mitsunobu Reaction Optimization
  - Organic Chemistry Tutor: Mitsunobu Reaction Mechanism & Drawbacks. Discussion on pKa limits and betaine intermediates. Link
  - Scientific Update: The sun never sets on synthetic methodology. Recent advances in redox-neutral Mitsunobu and troubleshooting pKa issues.[3] Link

Need Custom Synthesis?

BenchChem offers custom synthesis for rare earth carbides and specific isotopiclabeling.

Email: info@benchchem.com or Request Quote Online.

Sources

- 1. pdf.benchchem.com [pdf.benchchem.com]
- 2. pharmaxchange.info [pharmaxchange.info]
- 3. scientificupdate.com [scientificupdate.com]
- 4. chem.libretexts.org [chem.libretexts.org]
- 5. organicchemistrytutor.com [organicchemistrytutor.com]
- 6. researchgate.net [researchgate.net]
- 7. benchchem.com [benchchem.com]
- 8. researchgate.net [researchgate.net]
- To cite this document: BenchChem. [Technical Support Center: O-Alkylation Optimization & Catalyst Selection]. BenchChem, [2026]. [Online PDF]. Available at: [https://www.benchchem.com/product/b3169911#catalyst-selection-for-enhancing-o-alkylation-efficiency]

© 2026 BenchChem. All rights reserved.

Disclaimer & Data Validity:

The information provided in this document is for Research Use Only (RUO) and is strictly not intended for diagnostic or therapeutic procedures. While BenchChem strives to provide accurate protocols, we make no warranties, express or implied, regarding the fitness of this product for every specific experimental setup.

Technical Support: The protocols provided are for reference purposes. Unsure if this reagent suits your experiment? [Contact our Ph.D. Support Team for a compatibility check]

Need Industrial/Bulk Grade? Request Custom Synthesis Quote

BenchChem

Our mission is to be the trusted global source of essential and advanced chemicals, empowering scientists and researchers to drive progress in science and industry.

Contact

Address: 3281 E Guasti Rd

Ontario, CA 91761, United States

Phone: (601) 213-4426

Email: info@benchchem.com

© 2026 BenchChem. All rights reserved.