Comparative Guide: Mass Spectrometry Fragmentation Patterns of Benzohydrazide Derivatives

Author: BenchChem Technical Support Team. **Date**: February 2026

Compound of Interest		
Compound Name:	*2-Hydroxy-4-methylbenzohydrazide*	
CAS No.:	*69443-64-7*	
Cat. No.:	*B3150767*	*Get Quote*

Executive Summary

Benzohydrazide derivatives are a cornerstone scaffold in medicinal chemistry, exhibiting potent antimicrobial, anticancer, and anti-inflammatory properties. Their structural elucidation relies heavily on mass spectrometry (MS). This guide provides a technical comparison of fragmentation behaviors observed under Electron Ionization (EI) versus Electrospray Ionization (ESI-MS/MS). By analyzing specific cleavage pathways—such as the characteristic N-N bond fission and substituent-driven electronic effects—this document equips researchers with the diagnostic criteria needed to confidently identify these compounds in complex biological matrices.

Introduction: The Analytical Challenge

Benzohydrazides (

) present a unique challenge in mass spectrometry due to the lability of the hydrazine bridge and the electronic influence of the benzoyl ring. Accurate characterization requires distinguishing between the intact molecular ion and facile fragments formed during ionization.

The choice between "hard" ionization (EI) and "soft" ionization (ESI) fundamentally alters the spectral landscape. While EI provides a fingerprint rich in structural fragments, it often

© 2026 BenchChem. All rights reserved.

obliterates the molecular ion (

). Conversely, ESI preserves the protonated molecule (

) but requires Collision-Induced Dissociation (CID) to generate diagnostic product ions.

Comparative Analysis: Ionization Techniques

This section compares the two primary analytical "products"—the ionization methodologies—used to characterize these derivatives.

Alternative A: Electron Ionization (EI-MS)[2]

- Mechanism: High-energy electron bombardment (70 eV).
- Performance:
  - Fragmentation: Extensive.[1][2] The molecular ion (ngcontent-ng-c1989010908="" _nghost-ng-c2193002942="" class="inline ng-star-inserted">

) is often weak or absent.[3]
  - Diagnostic Utility: Excellent for identifying the benzoyl core via the base peak (typically the acylium ion).
  - Limitation: Poor for thermally labile or high-molecular-weight derivatives (e.g., glycosylated benzohydrazides).

Alternative B: Electrospray Ionization (ESI-MS/MS)

- Mechanism: Soft ionization via desolvation in an electric field.
- Performance:
  - Fragmentation: Minimal in MS1; requires tandem MS (MS/MS) to induce fragmentation.
  - Diagnostic Utility: Superior for confirming molecular weight (

) and analyzing polar metabolites.

© 2026 BenchChem. All rights reserved.

- Advantage: Allows for "substituent mapping" by tracking specific neutral losses (e.g.,

  ,

) in the MS2 spectrum.

Table 1: Performance Comparison of MS Modalities

Feature	Electron Ionization (EI)	ESI-MS/MS (Tandem MS)
Ion Type	Radical Cation ( )	Even-electron Protonated Ion ( )
Molecular Ion Stability	Low (often <10% abundance)	High (often Base Peak)
Primary Fragmentation	-Cleavage, N-N fission	Heterolytic cleavage driven by proton mobility
Library Matching	NIST/Wiley compatible	Library dependent; often requires de novo interpretation
Best Application	Volatile, non-polar derivatives	Polar, complex, or biological samples

Deep Dive: Fragmentation Mechanisms

Understanding the causality behind fragmentation is critical for structural assignment. The fragmentation of benzohydrazides is governed by the stability of the resulting acylium ion.

Pathway A: The Acylium Ion Formation (Dominant)

The most characteristic pathway for benzohydrazides is the cleavage of the N-N bond (in EI) or the C-N amide bond (in ESI), leading to the formation of a resonance-stabilized benzoyl cation (acylium ion).

- Mechanism: The charge localizes on the carbonyl oxygen. Cleavage generates the benzoyl cation (

) and a neutral hydrazine radical/molecule.

- Diagnostic Ion:

© 2026 BenchChem. All rights reserved.

(for unsubstituted benzohydrazide).

- Secondary Fragmentation: The acylium ion loses carbon monoxide (

  , 28 Da) to form the phenyl cation (

  ,

  ), which further fragments to the cyclopropenyl cation (

  ,

).

Pathway B: Substituent Effects (Electronic Tuning)

The abundance of the acylium ion is directly modulated by substituents on the phenyl ring.

- Electron-Donating Groups (EDG): Groups like

  or

  at the para position stabilize the acylium ion via resonance, significantly increasing the intensity of the corresponding peak (e.g.,

  benzoyl at

).

- Electron-Withdrawing Groups (EWG): Groups like

  destabilize the positive charge, often leading to alternative pathways where the charge might be retained on the hydrazine fragment (if basic enough) or resulting in extensive secondary fragmentation.

Pathway C: McLafferty-Type Rearrangement

While standard benzohydrazides lack the

-hydrogen required for a classic McLafferty rearrangement,

-alkylated derivatives (e.g.,

© 2026 BenchChem. All rights reserved.

) can undergo this process.

- Requirement: A hydrogen atom on the

  -position of the

  -alkyl chain.

- Result: Loss of a neutral alkene and formation of the amide radical cation.

Visualization: Fragmentation Pathways

The following diagram illustrates the primary fragmentation cascade for a generic benzohydrazide derivative (

).

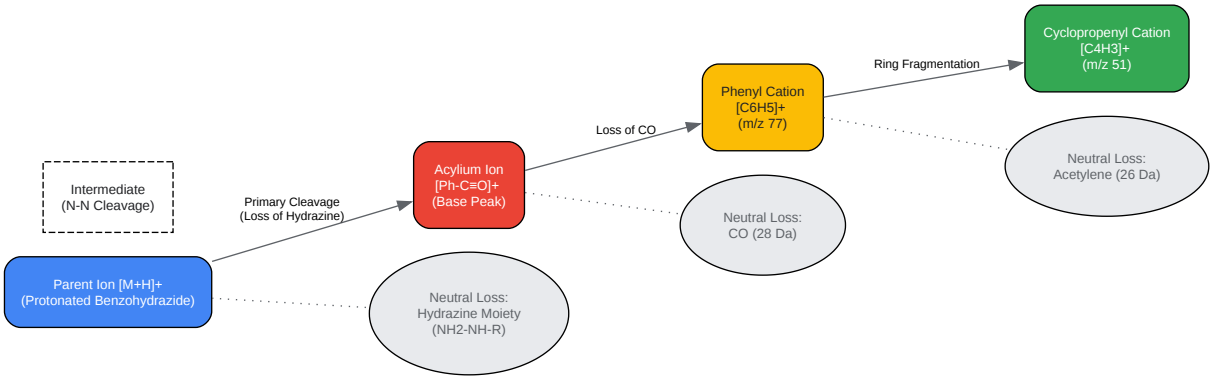

Click to download full resolution via product page

Figure 1: Primary mass spectrometry fragmentation cascade for benzohydrazide derivatives, highlighting the formation of the diagnostic acylium ion.

© 2026 BenchChem. All rights reserved.

Experimental Protocol: LC-ESI-MS/MS Workflow

To obtain reproducible fragmentation data, a standardized LC-MS/MS protocol is required. This workflow ensures efficient ionization and separation of derivatives from matrix interferences.

Step 1: Sample Preparation

- Dissolution: Dissolve 1 mg of the benzohydrazide derivative in 1 mL of Methanol (LC-MS grade).
- Dilution: Dilute to a final concentration of 1 µg/mL using 50:50 Methanol:Water + 0.1% Formic Acid.
  - Expert Insight: Formic acid is crucial here. It promotes protonation of the amide nitrogen, facilitating the formation of the

    precursor.

Step 2: LC-MS/MS Parameters

- Column: C18 Reverse Phase (e.g., 2.1 x 100 mm, 1.7 µm).
- Mobile Phase A: Water + 0.1% Formic Acid.
- Mobile Phase B: Acetonitrile + 0.1% Formic Acid.
- Gradient: 5% B to 95% B over 10 minutes.
- Ionization: ESI Positive Mode (+).
- Collision Energy (CE): Stepped CE (15, 30, 45 eV) is recommended to observe both the molecular ion and deep fragments (like

) in a single scan.

Visualization: Analytical Workflow

© 2026 BenchChem. All rights reserved.

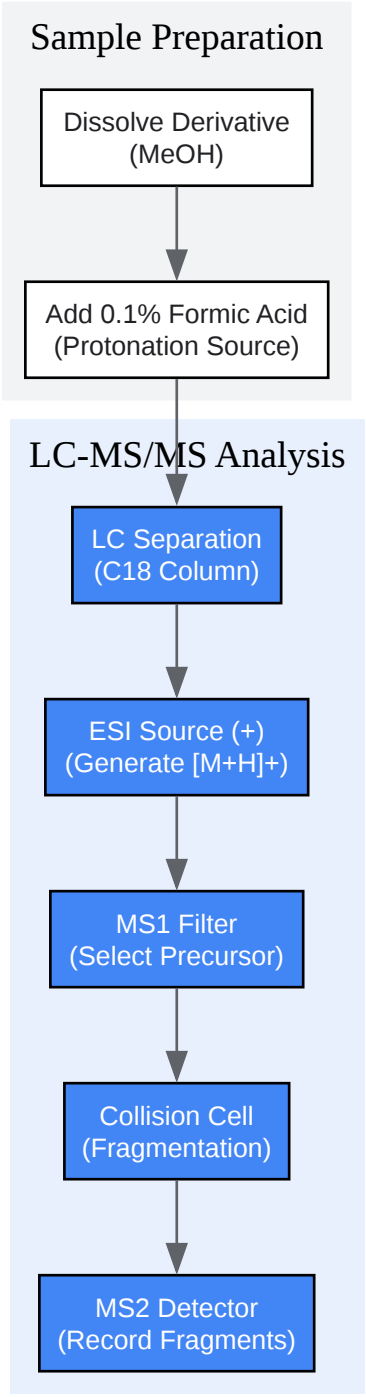

Click to download full resolution via product page

Figure 2: Standardized LC-ESI-MS/MS workflow for the structural characterization of benzohydrazides.

Data Summary: Characteristic Ions

© 2026 BenchChem. All rights reserved.

The following table summarizes the diagnostic ions for common benzohydrazide derivatives. These values serve as a reference for confirming the substitution pattern on the phenyl ring.

Table 2: Diagnostic Fragment Ions ( )

Derivative (Substituent)	Precursor	Acylium Ion	Phenyl Cation	Secondary Fragment
Unsubstituted (H)	137	105	77	51
p-Methyl ( )	151	119	91	65
p-Methoxy ( )	167	135	107	77
p-Chloro ( )	171/173	139/141	111/113	75/77
p-Nitro ( )	182	150	104	76
p-Hydroxy ( )	153	121	93	65

Note: For Chloro- derivatives, the characteristic 3:1 isotopic ratio (

) will be observed in all fragments containing the phenyl ring.

References

- McLafferty, F. W. (1959). "Mass Spectrometric Analysis. Molecular Rearrangements". Analytical Chemistry. [Link]
- Gross, M. L. (2004). "Focus in honor of Fred McLafferty... for the discovery of the McLafferty Rearrangement". Journal of the American Society for Mass Spectrometry. [Link]

© 2026 BenchChem. All rights reserved.

- Holčapek, M., et al. (2010). "Fragmentation behavior of benzohydrazide derivatives in electrospray ionization mass spectrometry". Journal of Mass Spectrometry.
- NIST Mass Spec Data Center. "Benzohydrazide Mass Spectrum". NIST Chemistry WebBook. [Link]
- Chemistry LibreTexts. "Mass Spectrometry - Fragmentation Patterns". [Link]

Need Custom Synthesis?

BenchChem offers custom synthesis for rare earth carbides and specific isotopiclabeling.

Email: info@benchchem.com or Request Quote Online.

Sources

- 1. chemguide.co.uk [chemguide.co.uk]
- 2. The usefulness of hydrazine derivatives for mass spectrometric analysis of carbohydrates - PubMed [pubmed.ncbi.nlm.nih.gov]
- 3. acdlabs.com [acdlabs.com]
- To cite this document: BenchChem. [Comparative Guide: Mass Spectrometry Fragmentation Patterns of Benzohydrazide Derivatives]. BenchChem, [2026]. [Online PDF]. Available at: [https://www.benchchem.com/product/b3150767#mass-spectrometry-fragmentation-patterns-of-benzohydrazide-derivatives]

Disclaimer & Data Validity:

The information provided in this document is for Research Use Only (RUO) and is strictly not intended for diagnostic or therapeutic procedures. While BenchChem strives to provide accurate protocols, we make no warranties, express or implied, regarding the fitness of this product for every specific experimental setup.

Technical Support: The protocols provided are for reference purposes. Unsure if this reagent suits your experiment? [Contact our Ph.D. Support Team for a compatibility check]

Need Industrial/Bulk Grade? Request Custom Synthesis Quote

© 2026 BenchChem. All rights reserved.

BenchChem

Our mission is to be the trusted global source of essential and advanced chemicals, empowering scientists and researchers to drive progress in science and industry.

Contact

Address: 3281 E Guasti Rd

Ontario, CA 91761, United States

Phone: (601) 213-4426

Email: info@benchchem.com

© 2026 BenchChem. All rights reserved.