Technical Guide: 2-(Bromomethyl)pyrrolidine – Hydrobromide vs. Free Base

Author: BenchChem Technical Support Team. **Date**: April 2026

Compound of Interest	
Compound Name:	*2-(Bromomethyl)pyrrolidine hydrobromide*
CAS No.:	*3433-29-2*
Cat. No.:	*B3130403*

Get Quote

Executive Summary

2-(Bromomethyl)pyrrolidine is a critical chiral building block in medicinal chemistry, particularly for the synthesis of pyrrolidine-based alkaloids and pharmaceutical intermediates. However, its utility is governed by a sharp dichotomy in stability between its two forms.

- The Hydrobromide Salt (HBr): A stable, crystalline solid suitable for long-term storage.
- The Free Base: A thermodynamically unstable oil that rapidly decomposes via a "suicide" cyclization mechanism.

This guide details the mechanistic underpinnings of this instability, provides validated protocols for in situ handling, and outlines safety measures for managing its nitrogen-mustard-like reactivity.

Part 1: Structural & Physicochemical Divergence

© 2026 BenchChem. All rights reserved.

The fundamental difference lies in the availability of the nitrogen lone pair electrons. In the HBr salt, the nitrogen is protonated (ammonium form), rendering it non-nucleophilic. In the free base, the lone pair is free, triggering immediate intramolecular reactivity.

Comparative Properties Table

Feature	**2-(Bromomethyl)pyrrolidine** HBr	**2-(Bromomethyl)pyrrolidine** Free Base
CAS Number	3433-29-2	72799-24-3 (Generic/Unstable)
Physical State	White to off-white crystalline solid	Colorless to yellow oil
Shelf Stability	High (Years if stored desiccated)	Extremely Low (Minutes to Hours)
Reactivity	Latent (Requires neutralization)	Kinetic (Self-reactive electrophile)
Hygroscopicity	Hygroscopic (Absorbs moisture)	N/A (Decomposes in water)
Storage	Desiccated, Inert Gas, Ambient/Cool	Do Not Store (Generate in situ only)

Part 2: The Stability Paradox (The Aziridinium Mechanism)

The free base of 2-(bromomethyl)pyrrolidine is not merely "unstable" in the sense of oxidation; it undergoes a rapid, intramolecular alkylation. This is a classic example of neighbouring group participation (NGP).

The Mechanism of Decomposition

- Activation: Upon neutralization of the HBr salt, the nitrogen lone pair becomes available.
- Cyclization: The nitrogen attacks the adjacent carbon bearing the bromine atom (an intramolecular

© 2026 BenchChem. All rights reserved.

reaction).

- Aziridinium Formation: This forms a bicyclic 1-azoniabicyclo[3.1.0]hexane cation (an aziridinium ion).
- Ring Opening: This strained, charged intermediate is a potent electrophile. It reacts non-selectively with any available nucleophile (trace water, solvent, or another molecule of the amine) to form oligomers or hydrolyzed alcohol byproducts.

Visualization: The "Suicide" Cyclization Pathway

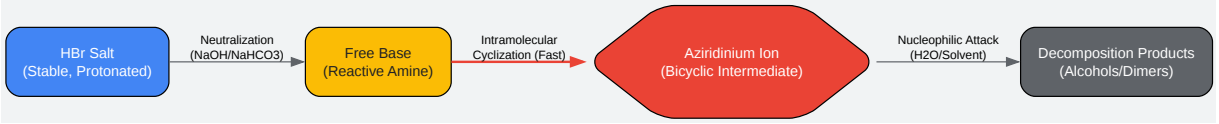

Click to download full resolution via product page

Caption: The kinetic pathway from stable salt to reactive aziridinium intermediate. The red arrow indicates the rapid self-destruction of the free base.

Part 3: Practical Handling & Synthetic Protocols

Due to the mechanism described above, never attempt to isolate or store the free base. All reactions requiring the free amine must utilize an in situ neutralization strategy.

Protocol: In Situ Liberation and Reaction

Objective: Use 2-(bromomethyl)pyrrolidine as a nucleophile or electrophile without isolating the unstable intermediate.

Reagents

- 2-(Bromomethyl)pyrrolidine HBr[1][2]
- Solvent: DCM (Dichloromethane) or THF (Anhydrous)

© 2026 BenchChem. All rights reserved.

- Base:

  (Triethylamine) or DIPEA (Diisopropylethylamine)

- Temperature:

  (Ice bath)

Step-by-Step Methodology

- Suspension: Charge the reaction vessel with 2-(bromomethyl)pyrrolidine HBr and anhydrous DCM under an inert atmosphere (

  or Ar). The salt will likely remain as a suspension.

- Cooling: Cool the suspension to

  . Low temperature retards the rate of aziridinium formation.

- Neutralization: Add the organic base (e.g., 2.2 equivalents of

) dropwise.

  - Observation: The suspension may clear as the free base is liberated and dissolves, or a new precipitate (

) may form.

- Immediate Reaction: Add the reaction partner (e.g., an acyl chloride, alkyl halide, or nucleophile) immediately (within 5 minutes).

  - Critical Control: Do not let the free base solution stir without the reaction partner for >15 minutes.

- Workup: Once the coupling is complete, the pyrrolidine nitrogen is usually derivatized (e.g., to an amide), preventing the cyclization and stabilizing the molecule.

Workflow Diagram

© 2026 BenchChem. All rights reserved.

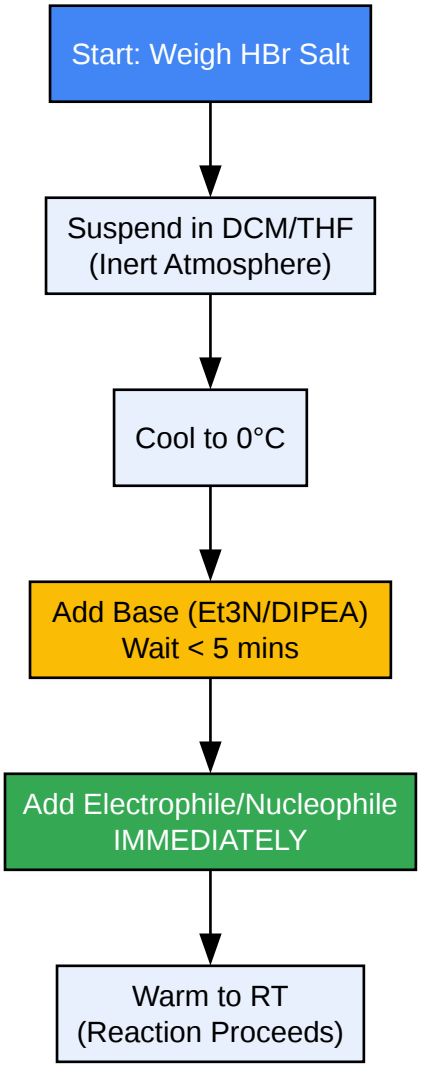

Click to download full resolution via product page

Caption: Operational workflow for safe utilization of the HBr salt. The yellow node represents the critical time-sensitive step.

Part 4: Safety & Toxicology (E-E-A-T)

Warning: The instability mechanism generates an aziridinium ion, which functions chemically as a nitrogen mustard.[3][4]

- Alkylating Potential: The intermediate aziridinium species is a potent alkylating agent. It can alkylate DNA, posing potential mutagenic or carcinogenic risks.
- Corrosivity: The HBr salt is corrosive to mucous membranes and eyes.

© 2026 BenchChem. All rights reserved.

- Decontamination: Spills of the free base or reaction mixtures should be treated with an aqueous solution of sodium thiosulfate or dilute acid (to ring-open the aziridinium to a less toxic alcohol) before disposal.

References

- Cossy, J., et al. (2015).[4] "Stereoselective rearrangement of (Trifluoromethyl)prolinols to enantioenriched 3-substituted 2-(Trifluoromethyl) piperidines." Organic Letters, 17(12), 2916–2919. (Demonstrates aziridinium intermediates from prolinol derivatives).
- D'Hogge, R., et al. (2021). "Synthetic Applications of Aziridinium Ions." Molecules, 26(6), 1774. [Link]

Need Custom Synthesis?

BenchChem offers custom synthesis for rare earth carbides and specific isotopiclabeling.

Email: info@benchchem.com or Request Quote Online.

Sources

- 1. 2-(Bromomethyl)pyrrolidine hydrobromide | 3433-29-2 [sigmaaldrich.cn]
- 2. CAS 3433-29-2: Pyrrolidine, 2-(bromomethyl)-, hydrobromide… [cymitquimica.com]
- 3. encyclopedia.pub [encyclopedia.pub]
- 4. mdpi.com [mdpi.com]
- To cite this document: BenchChem. [Technical Guide: 2-(Bromomethyl)pyrrolidine – Hydrobromide vs. Free Base]. BenchChem, [2026]. [Online PDF]. Available at: [https://www.benchchem.com/product/b3130403/docs#technical-guide-2-bromomethyl-pyrrolidine-hydrobromide-vs-free-base]

Disclaimer & Data Validity:

The information provided in this document is for Research Use Only (RUO) and is strictly not intended for diagnostic or therapeutic procedures. While BenchChem strives to provide

accurate protocols, we make no warranties, express or implied, regarding the fitness of this product for every specific experimental setup.

Technical Support: The protocols provided are for reference purposes. Unsure if this reagent suits your experiment?

Need Industrial/Bulk Grade? Request Custom Synthesis Quote

BenchChem

Our mission is to be the trusted global source of essential and advanced chemicals, empowering scientists and researchers to drive progress in science and industry.

Contact

Address: 3281 E Guasti Rd

Ontario, CA 91761, United States

Phone: (601) 213-4426

Email: info@benchchem.com

Contact our Ph.D. Support Team for a compatibility check

© 2026 BenchChem. All rights reserved.