Crystal Engineering of Fluorinated Quinolines: A Structural Comparison Guide

Author: BenchChem Technical Support Team. **Date**: March 2026

Compound of Interest		
Compound Name:	*5,6,7-Trifluoro-2-methylquinoline*	
CAS No.:	*346604-41-9*	
Cat. No.:	*B3130943*	Get Quote

Introduction: The "Fluorine Effect" in Quinoline Scaffolds

In drug discovery, the quinoline scaffold is a privileged structure, serving as the backbone for antimalarials (Chloroquine), antibiotics (Ciprofloxacin), and emerging anticancer agents. The strategic introduction of fluorine—often described as the "ferryman" of medicinal chemistry—profoundly alters the physicochemical profile of these molecules.

However, for the structural chemist, fluorine presents a unique paradox. It is sterically mimetic to hydrogen (Van der Waals radius: F = 1.47 Å vs. H = 1.20 Å) yet electronically distinct (electronegativity: F = 4.0 vs. H = 2.1). This guide objectively compares the crystallographic performance of fluorinated quinolines against their non-fluorinated and chlorinated analogs, providing actionable insights into their solid-state behavior.

Comparative Analysis: Structural Metrics & Performance[1]

The following data synthesizes X-ray diffraction findings from recent high-resolution studies (see References). This comparison highlights how fluorine substitution shifts the "interaction landscape" from classical hydrogen bonding to weaker, yet structure-directing, fluorine contacts.

© 2026 BenchChem. All rights reserved.

Table 1: Interaction Landscape Comparison (Fluorine vs. Alternatives)

Metric	Fluorinated Quinoline (C-F)	Non-Fluorinated (C-H)	Chlorinated Analog (C-Cl)	Crystallographic Impact
Bond Length (C-X)	1.35 – 1.38 Å	1.08 – 1.10 Å	1.73 – 1.75 Å	C-F is robust; C-Cl often shows halogen bonding (σ-hole).
Primary Interaction	C-H···F (Weak H-bond)	C-H···π / π···π	C-Cl···O / Cl···Cl	F acts as a weak acceptor; rarely forms strong "halogen bonds" like Cl/Br.
Interaction Distance	2.50 – 2.70 Å (H···F)	2.60 – 2.90 Å (H···C)	3.00 – 3.30 Å (Cl···O)	F-contacts are shorter, leading to tighter local packing but lower lattice energy.
Lattice Motif	Planar Sheets / Herringbone	T-shaped / Edge-to-Face	Layered / Segregated	F-substitution often flattens the packing, promoting sheet formation via C-F···π interactions.[1][2]
Disorder Risk	Moderate (Positional)	Low	Low	F/H positional disorder is common due to size similarity; requires high-quality data (<100 K).

© 2026 BenchChem. All rights reserved.

Performance Insight: The "Orthogonal" Fluorine

In substituted quinolines (e.g., 8-fluoro-2,3-dimethylquinolin-4-yl derivatives), the fluorine atom frequently adopts a specific geometry. Unlike the "head-on" halogen bonding seen with Chlorine or Bromine (where the electrophilic σ-hole interacts with a nucleophile), Fluorine in quinolines often engages in orthogonal C-F···C=O interactions or C-F···π interactions.

- Experimental Evidence: In 6-amino-2-(4-fluorophenyl)-4-(trifluoromethyl)quinoline, the crystal packing is dictated not by strong H-bonds, but by a cumulative network of weak C-H···F interactions, which are statistically significant (RF value > 1) compared to random packing.

Structural Logic & Interaction Pathways

To understand how to engineer these crystals, one must visualize the hierarchy of forces. The diagram below maps the decision logic for intermolecular interactions in fluorinated quinolines.

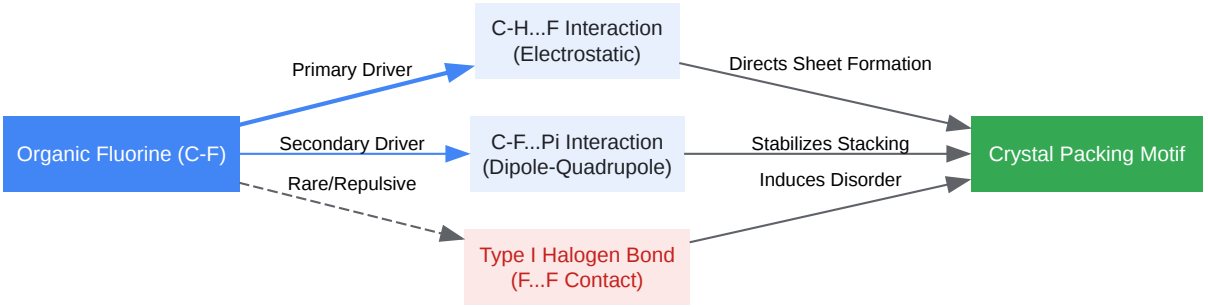

Click to download full resolution via product page

Figure 1: Hierarchy of intermolecular interactions driving the crystal packing of fluorinated quinolines.

Experimental Protocol: Crystallization & Validation

This protocol is designed to overcome the common "oiling out" issues associated with fluorinated heterocycles due to their high lipophilicity.

Phase 1: Synthesis & Purification (Prerequisite)

© 2026 BenchChem. All rights reserved.

- Context: Purity is critical. Fluorinated impurities (e.g., regioisomers) often co-crystallize, leading to unresolvable disorder.
- Standard: >98% purity by HPLC.
- Key Step: If synthesizing via condensation (e.g., 2-fluoroaniline + ketoester), ensure removal of non-cyclized intermediates via column chromatography (Hexane/EtOAc gradient).

Phase 2: Crystallization Workflow

Objective: Grow single crystals suitable for XRD (>0.1 mm in two dimensions).

- Solubility Screen:
  - Test solubility in: Ethanol (Polar/Protic), Acetonitrile (Polar/Aprotic), and DCM (Non-polar).
  - Note: Fluorinated quinolines often show high solubility in DCM but poor solubility in alcohols.
- Method A: Slow Evaporation (Preferred for stable polymorphs)
  - Dissolve 10-15 mg of compound in minimal hot Ethanol or Acetonitrile.
  - Filter through a 0.45 µm PTFE syringe filter into a clean scintillation vial.
  - Cover with Parafilm and poke 3-5 small holes.
  - Store in a vibration-free, dark environment at 20°C.
- Method B: Vapor Diffusion (For "oily" compounds)
  - Inner Vial: Dissolve 10 mg compound in 0.5 mL THF or DCM.
  - Outer Vial: Add 3 mL Pentane or Hexane (Anti-solvent).
  - Cap tightly. The volatile anti-solvent will diffuse into the solution, slowly increasing supersaturation.

© 2026 BenchChem. All rights reserved.

Phase 3: Data Collection & Refinement

- Temperature: Collect data at 100 K. Fluorine atoms have high thermal motion; room temperature data often results in "smeared" electron density maps.
- Radiation: Mo-Kα (λ = 0.71073 Å) is standard.[3] For crystals with heavy atoms (Br/I) or very small crystals, Cu-Kα is preferred.
- Refinement Strategy (SHELXL):
  - Locate F atoms early in the difference map.
  - If disorder is present (e.g., CF3 rotation), use restraints (DELU, SIMU) or split positions with occupancy refinement (e.g., PART 1 / PART 2).

© 2026 BenchChem. All rights reserved.

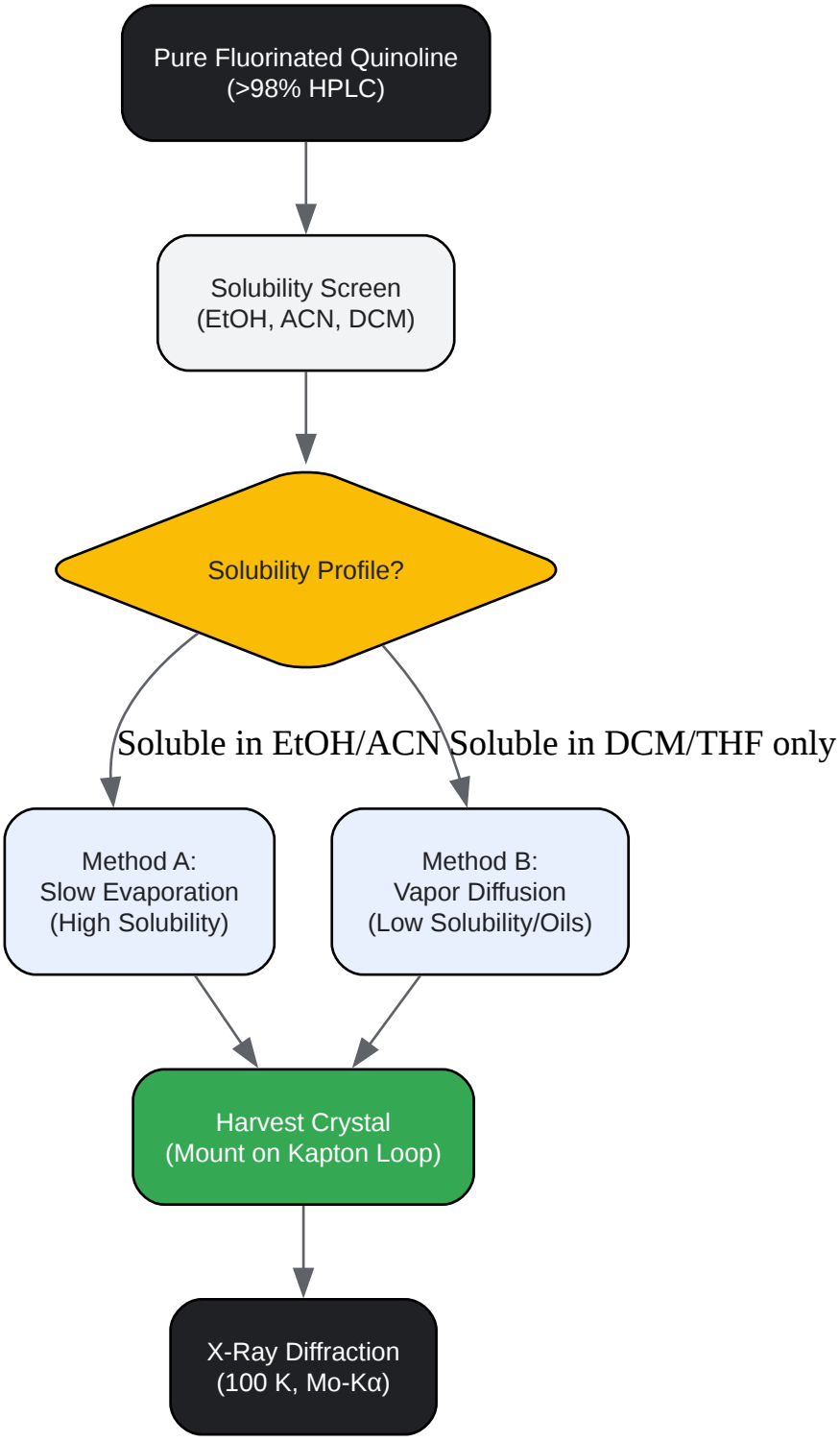

Click to download full resolution via product page

Figure 2: Decision matrix for crystallizing lipophilic fluorinated heterocycles.

References

© 2026 BenchChem. All rights reserved.

- Kopchuk, D. S., et al. (2019).[4] X-Ray Crystallographic Studies in A Series of Substituted (Fluorinated) 2-(2-Pyridyl)Quinolines. Journal of Structural Chemistry.
- Bagryanskaya, I. Y., et al. (2008).[5] X-ray and quantum-topological studies of intermolecular interactions in partially fluorinated quinoline crystals. Journal of Structural Chemistry.
- Zhang, Y., et al. (2023). Synthesis, Structural Determination, and Antifungal Activity of Novel Fluorinated Quinoline Analogs. MDPI Molecules.
- Chopra, D., & Guru Row, T. N. (2008). Role of organic fluorine in crystal engineering: Insights from packing features in substituted isoquinolines. CrystEngComm.
- Reutzel-Edens, S. M. (2020). Crystallization of Fluorinated Pharmaceuticals: Challenges and Opportunities. Chemical Reviews.

Need Custom Synthesis?

BenchChem offers custom synthesis for rare earth carbides and specific isotopiclabeling.

Email: info@benchchem.com or Request Quote Online.

Sources

- 1. pubs.acs.org [pubs.acs.org]
- 2. tandfonline.com [tandfonline.com]
- 3. Synthesis, Structural Determination, and Antifungal Activity of Novel Fluorinated Quinoline Analogs - PMC [pmc.ncbi.nlm.nih.gov]
- 4. researchgate.net [researchgate.net]
- 5. X-ray and quantum-topological studies of intermolecular interactions in partially fluorinated quinoline crystals | Sciact - научная деятельность [sciact.nioch.nsc.ru]
- To cite this document: BenchChem. [Crystal Engineering of Fluorinated Quinolines: A Structural Comparison Guide]. BenchChem, [2026]. [Online PDF]. Available at: [https://www.benchchem.com/product/b3130943#x-ray-crystallography-data-for-substituted-fluorinated-quinolines]

Disclaimer & Data Validity:

The information provided in this document is for Research Use Only (RUO) and is strictly not intended for diagnostic or therapeutic procedures. While BenchChem strives to provide accurate protocols, we make no warranties, express or implied, regarding the fitness of this product for every specific experimental setup.

Technical Support: The protocols provided are for reference purposes. Unsure if this reagent suits your experiment? [Contact our Ph.D. Support Team for a compatibility check]

Need Industrial/Bulk Grade? Request Custom Synthesis Quote

BenchChem

Our mission is to be the trusted global source of essential and advanced chemicals, empowering scientists and researchers to drive progress in science and industry.

Contact

Address: 3281 E Guasti Rd

Ontario, CA 91761, United States

Phone: (601) 213-4426

Email: info@benchchem.com

© 2026 BenchChem. All rights reserved.