Technical Guide: Comparative Analysis of Amino-Bromo-Picolinic Acid Isomers

Author: BenchChem Technical Support Team. **Date**: May 2026

Compound of Interest

Compound Name:	*5-Amino-6-bromopyridine-2-carboxylic acid*
CAS No.:	*1402672-55-2*
Cat. No.:	*B3101848*

Get Quote

Executive Summary

In fragment-based drug discovery (FBDD) and scaffold hopping, the positioning of amino and bromo substituents on the picolinic acid core dictates synthetic utility and pharmacological potential.

- 3-Amino-6-bromo-2-picolinic acid is defined by an ortho-amino-acid motif, facilitating intramolecular hydrogen bonding and metal chelation. It serves as a precursor to pyrido[3,2-d]pyrimidines.
- 5-Amino-6-bromo-2-picolinic acid is defined by an ortho-amino-halogen motif. It is a "linear" scaffold where the amino group is para to the carboxylate, making it a prime precursor for imidazo[4,5-b]pyridines and extended linker systems (e.g., PROTACs).

Part 1: Structural & Electronic Characterization

Electronic Topography & Chelation

© 2026 BenchChem. All rights reserved.

The fundamental difference lies in the proximity of the amino group to the carboxylic acid and the bromine atom.

Feature	3-Amino Isomer	5-Amino Isomer
IUPAC Name	3-amino-6-bromopyridine-2-carboxylic acid	5-amino-6-bromopyridine-2-carboxylic acid
CAS Number	1052708-46-9	1214356-69-6 (Est.) / Derived from 126325-53-9
Amino Motif	Ortho to COOH (Anthranilic-like)	Ortho to Br (o-Haloaniline-like)
H-Bonding	Strong Intramolecular (NH O=C)	Intermolecular (Solvent exposed)
Metal Binding	Tridentate potential (N, NH2, COOH)	Bidentate (N, COOH)
Electronic Effect	NH2 activates C2, C4, C6.	NH2 activates C2, C4, C6 (Stronger push to COOH)

Structural Visualization

The following diagram illustrates the steric and electronic vectors. Note the "Chelation Pocket" in the 3-amino isomer versus the "Cyclization Handle" in the 5-amino isomer.

© 2026 BenchChem. All rights reserved.

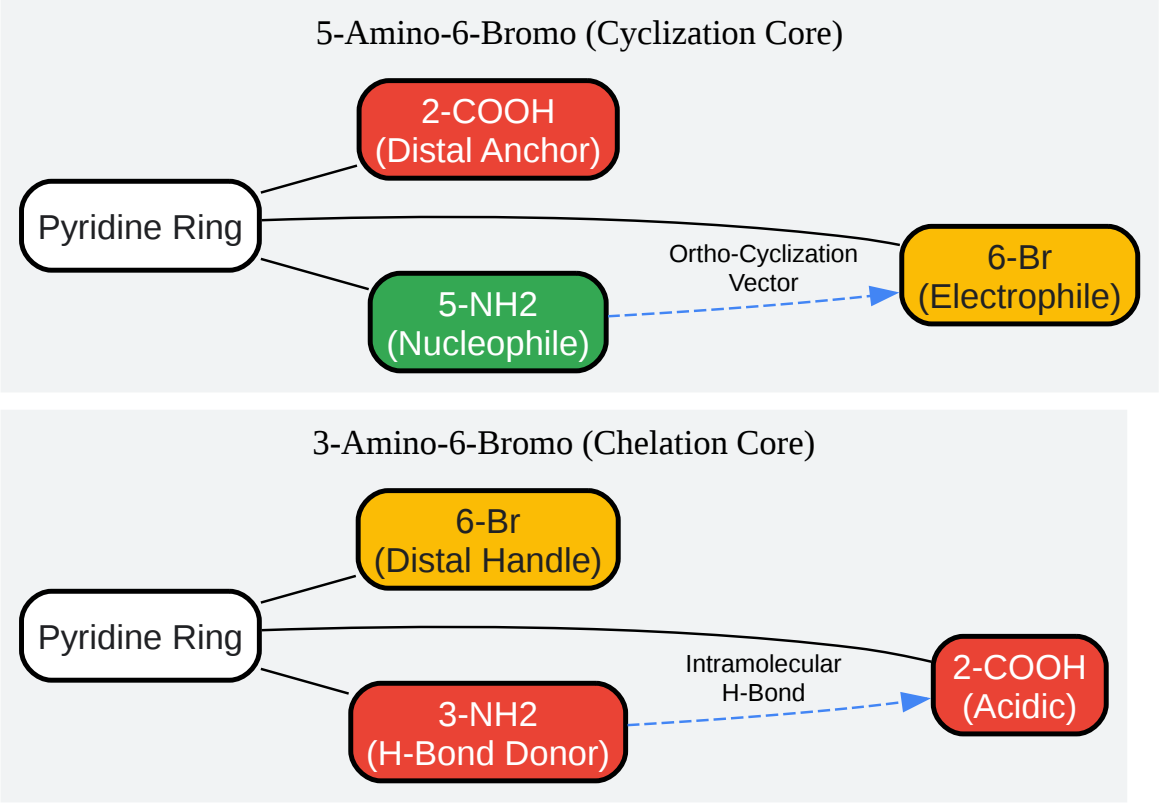

Click to download full resolution via product page

Caption: Structural logic showing the H-bond lock in the 3-amino isomer vs. the imidazopyridine cyclization vector in the 5-amino isomer.

Part 2: Synthetic Accessibility & Pathways

Synthesis of 3-Amino-6-bromopicolinic Acid

This isomer is typically accessed via the bromination of 3-aminopicolinic acid. The amino group at C3 strongly activates the C6 position (para-directing), making regioselectivity high.

- Starting Material: 3-Aminopicolinic acid.[1][2][3]
- Reagent: N-Bromosuccinimide (NBS) or Br2/AcOH.
- Mechanism: Electrophilic Aromatic Substitution (EAS).

© 2026 BenchChem. All rights reserved.

- Key Challenge: Avoiding over-bromination at C4.

Synthesis of 5-Amino-6-bromopicolinic Acid

Direct nitration of 6-bromopicolinic acid is difficult due to conflicting directing groups. The preferred route involves oxidation of a methyl precursor.

- Starting Material: 3-Amino-2-bromo-6-methylpyridine (CAS 126325-53-9).
- Renumbering Logic: The methyl is at C6. Upon oxidation to COOH, priority rules change: C6-Me becomes C2-COOH. The C2-Br becomes C6-Br. The C3-NH2 becomes C5-NH2.
- Reagent: KMnO4 (aqueous pyridine) or SeO2.
- Key Challenge: Preventing oxidation of the amino group (protection with Acetyl/Boc may be required).

© 2026 BenchChem. All rights reserved.

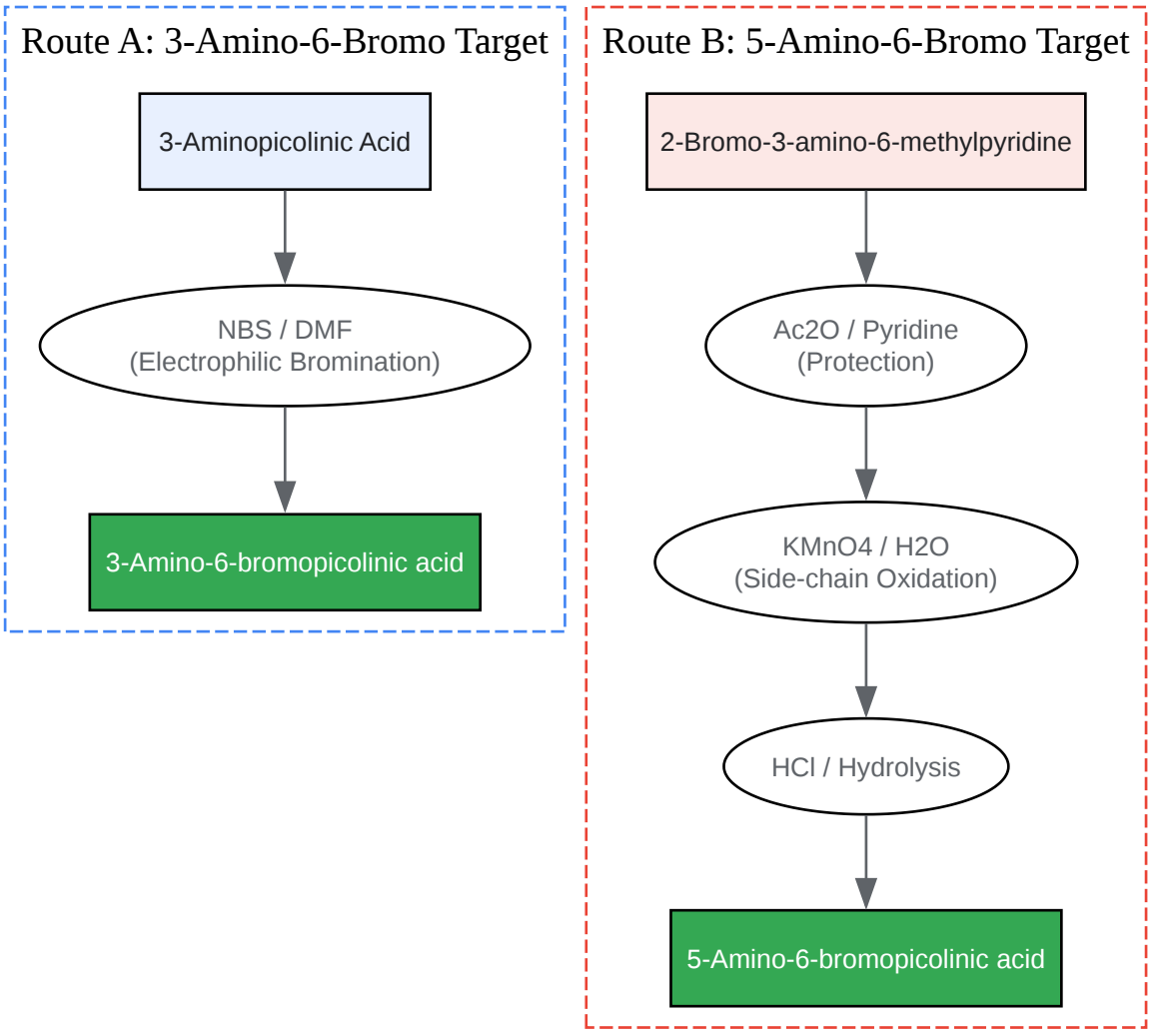

Click to download full resolution via product page

Caption: Divergent synthetic lineages. Route A utilizes electronic activation; Route B utilizes side-chain functionalization.

Part 3: Reactivity Profiles & Applications

The "Ortho-Effect" Divergence

The position of the amino group dictates the type of heterocycle that can be formed.

Case A: 3-Amino Isomer (Pyridopyrimidines)

Because the amine is adjacent to the carboxylic acid (or ester), it reacts with formamide, urea, or isocyanates to form pyrido[3,2-d]pyrimidines.

© 2026 BenchChem. All rights reserved.

- Mechanism: Condensation of NH2 and COOH/COOR with a C1 synthon.
- Drug Class: Kinase inhibitors (e.g., PI3K, mTOR).

Case B: 5-Amino Isomer (Imidazopyridines)

Because the amine is adjacent to the bromine, it reacts via metal-catalyzed cyclization or nucleophilic substitution to form imidazo[4,5-b]pyridines.

- Mechanism: Palladium-catalyzed C-N bond formation (Buchwald-Hartwig type) or copper-catalyzed cyclization with amidines/aldehydes.
- Drug Class: GPCR modulators, Anti-infectives.

Cross-Coupling Selectivity

Both isomers possess a C6-Bromine, but the electronic environment differs.

- 3-Amino-6-Bromo: The C6-Br is para to the electron-donating NH2. This pushes electron density toward the C-Br bond, potentially deactivating it slightly for oxidative addition (Pd0 -> PdII) compared to a naked pyridine, but the ring nitrogen still activates it.
- 5-Amino-6-Bromo: The C6-Br is ortho to the electron-donating NH2. This creates steric hindrance for bulky phosphine ligands but also allows for directed metalation or specific chelation-assisted catalysis.

Part 4: Experimental Protocols

Protocol: Regioselective Bromination (Synthesis of 3-Amino Isomer)

Objective: Synthesis of 3-amino-6-bromopicolinic acid from 3-aminopicolinic acid.

- Preparation: Dissolve 3-aminopicolinic acid (1.0 eq) in DMF (0.5 M concentration).
- Bromination: Cool to 0°C. Add N-Bromosuccinimide (NBS) (1.05 eq) portion-wise over 30 minutes.
  - Note: Slow addition prevents poly-bromination.

© 2026 BenchChem. All rights reserved.

- Reaction: Allow to warm to Room Temperature (RT) and stir for 4–6 hours. Monitor by LC-MS (Target M+H: ~217/219).
- Workup: Pour into ice water. The product often precipitates due to the zwitterionic nature.
- Purification: Filter the solid. If no precipitate, extract with EtOAc (pH adjusted to ~4-5). Recrystallize from EtOH/Water.[4]

Protocol: Suzuki-Miyaura Coupling (General for C6-Br)

Objective: Functionalization of the C6 position (applicable to both isomers, but 5-amino requires care with catalyst selection due to ortho-NH2 coordination).

- Reagents: Bromo-picolinic acid derivative (1.0 eq), Boronic Acid (1.2 eq), Pd(dppf)Cl2 (0.05 eq), K2CO3 (3.0 eq).
- Solvent: 1,4-Dioxane/Water (4:1).
- Condition: Degas with Argon for 10 min. Heat to 90°C for 12 hours.
- Note for 5-Amino Isomer: The free NH2 ortho to Br may poison the catalyst. If yields are low, use the N-acetyl protected version or switch to a precatalyst like XPhos Pd G3 which is robust against amine coordination.

References

- PubChem.3-Amino-6-bromopicolinic acid (CID 45480452).[5] National Library of Medicine.[5] [Link][5]
- Heterocyclic Letters.Convenient and Scalable Process for Preparation of 2,5-Dibromopyridine (Discusses bromination of aminopyridines). [Link] (Contextual Reference for reactivity)
- Journal of Organic Chemistry.Nucleophilicities of Amino Acids and Peptides (Reactivity of amino groups). [Link]

© 2026 BenchChem. All rights reserved.

Need Custom Synthesis?

BenchChem offers custom synthesis for rare earth carbides and specific isotopiclabeling.

Email: info@benchchem.com or Request Quote Online.

Sources

- 1. 3-Aminopicolinic acid | C6H6N2O2 | CID 73836 - PubChem [pubchem.ncbi.nlm.nih.gov]
- 2. amerigoscientific.com [amerigoscientific.com]
- 3. 3-Amino-6-bromopicolinic acid [acrospharmatech.com]
- 4. irl.umsl.edu [irl.umsl.edu]
- 5. 3-Amino-6-bromopicolinic acid | C6H5BrN2O2 | CID 45480452 - PubChem [pubchem.ncbi.nlm.nih.gov]
- To cite this document: BenchChem. [Technical Guide: Comparative Analysis of Amino-Bromo-Picolinic Acid Isomers]. BenchChem, [2026]. [Online PDF]. Available at: [https://www.benchchem.com/product/b3101848/docs#technical-guide-comparative-analysis-of-amino-bromo-picolinic-acid-isomers]

Disclaimer & Data Validity:

The information provided in this document is for Research Use Only (RUO) and is strictly not intended for diagnostic or therapeutic procedures. While BenchChem strives to provide accurate protocols, we make no warranties, express or implied, regarding the fitness of this product for every specific experimental setup.

Technical Support: The protocols provided are for reference purposes. Unsure if this reagent suits your experiment?

Need Industrial/Bulk Grade? Request Custom Synthesis Quote

BenchChem

Our mission is to be the trusted global source of essential and advanced chemicals, empowering scientists and researchers to drive progress in science and industry.

Contact

Address: 3281 E Guasti Rd

Ontario, CA 91761, United States

Phone: (601) 213-4426

Email: info@benchchem.com

Contact our Ph.D. Support Team for a compatibility check

© 2026 BenchChem. All rights reserved.