Distinguishing Isomers of C9H10BrNO2: A Predictive Guide to Mass Spectrometry Fragmentation Patterns

Author: BenchChem Technical Support Team. **Date**: April 2026

Compound of Interest

Compound Name:	*Ethyl 2-(2-bromopyridin-4-yl)acetate*
CAS No.:	*1256337-24-2*
Cat. No.:	*B3094279*

Get Quote

For researchers and professionals in drug development and chemical analysis, the unambiguous identification of constitutional isomers is a persistent challenge. Molecules sharing the same chemical formula (C9H10BrNO2) can exhibit vastly different chemical, physical, and toxicological properties. High-resolution mass spectrometry, particularly with electron ionization (EI), stands as a powerful tool for differentiating these isomers by analyzing their unique fragmentation patterns. This guide provides a predictive comparison of the EI mass spectrometry fragmentation pathways for three plausible nitro-containing isomers of C9H10BrNO2, based on established fragmentation principles for nitroaromatic, brominated, and alkyl-substituted benzene compounds.

The three representative isomers chosen for this comparative analysis are:

- 4-Bromo-1-ethyl-2-nitrobenzene
- 1-Bromo-2,4-dimethyl-5-nitrobenzene

© 2026 BenchChem. All rights reserved.

- 1-Bromo-4-isopropyl-2-nitrobenzene

This guide will delve into the predicted fragmentation of each isomer, highlighting the key diagnostic ions that can be used for their differentiation.

Isomer 1: 4-Bromo-1-ethyl-2-nitrobenzene

In this isomer, the ethyl group is positioned para to the bromine atom and ortho to the nitro group. The primary site of initial fragmentation is expected to be the benzylic C-C bond of the ethyl group, which is a favored cleavage pathway for alkylbenzenes.

The fragmentation of nitroaromatic compounds is characterized by the loss of the nitro group as NO2 or NO radicals.[1][2] The presence of bromine will result in a characteristic isotopic pattern for bromine-containing ions (M/M+2 peaks with approximately equal intensity).[1]

Predicted Fragmentation Data for 4-Bromo-1-ethyl-2-nitrobenzene:

© 2026 BenchChem. All rights reserved.

m/z (Predicted)	Proposed Ion Structure/Formula	Proposed Neutral Loss	Notes
243/245	[C8H8BrNO2]+•	-	Molecular Ion (M+•). Exhibits the characteristic M/M+2 isotope pattern for bromine.
228/230	[C7H5BrNO2]+•	•CH3	Benzylic cleavage, loss of a methyl radical from the ethyl group. This is expected to be a major fragmentation pathway.[3]
197/199	[C8H8Br]+•	•NO2	Loss of the nitro group. A common fragmentation for nitroaromatic compounds.[1]
182/184	[C7H5Br]+•	•CH3, •NO2	Consecutive loss of a methyl radical and a nitro group.
118	[C8H8NO2]+	•Br	Loss of the bromine radical.
103	[C7H5NO2]+	•Br, •CH3	Loss of bromine and a methyl radical.
77	[C6H5]+	•Br, •C2H3NO2	Loss of bromine and the ethyl and nitro-substituted fragment, leading to the phenyl cation.[1]

Proposed Fragmentation Pathway for 4-Bromo-1-ethyl-2-nitrobenzene:

© 2026 BenchChem. All rights reserved.

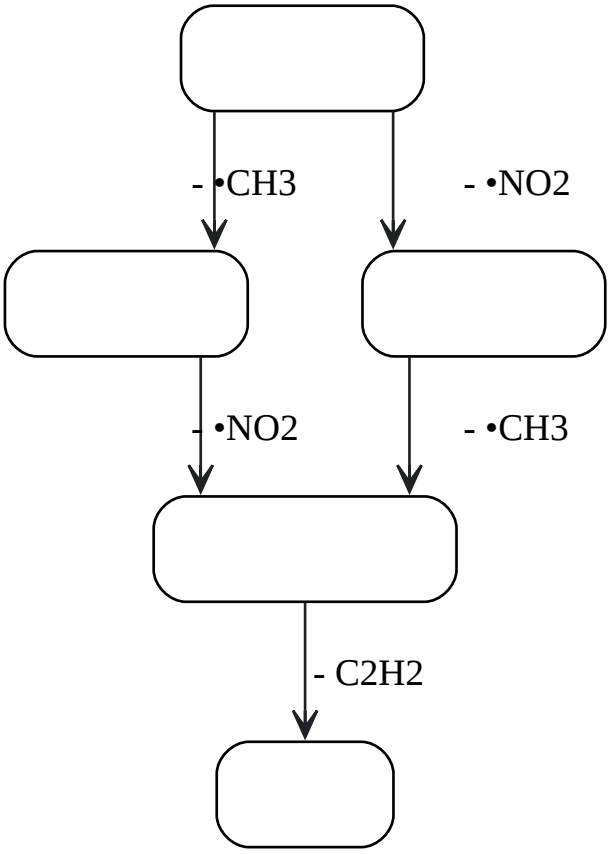

Click to download full resolution via product page

Predicted EI-MS fragmentation of 4-Bromo-1-ethyl-2-nitrobenzene.

Isomer 2: 1-Bromo-2,4-dimethyl-5-nitrobenzene

This isomer features two methyl groups, which can also undergo fragmentation, although benzylic cleavage is generally less favorable for methyl groups compared to larger alkyl groups. The relative positions of the substituents will influence the stability of the resulting fragment ions.

Predicted Fragmentation Data for 1-Bromo-2,4-dimethyl-5-nitrobenzene:

© 2026 BenchChem. All rights reserved.

m/z (Predicted)	Proposed Ion Structure/Formula	Proposed Neutral Loss	Notes
243/245	[C8H8BrNO2]+•	-	Molecular Ion (M+•). Exhibits the M/M+2 isotope pattern.
226/228	[C8H7BrNO]+•	•OH	Loss of a hydroxyl radical, potentially through rearrangement involving the nitro group and an adjacent methyl group (ortho effect).[2]
197/199	[C8H8Br]+•	•NO2	Loss of the nitro group.
182/184	[C7H5Br]+•	•CH3, •NO2	Loss of a methyl radical and a nitro group.
118	[C8H8NO2]+	•Br	Loss of the bromine radical.
117	[C8H7NO2]+•	H•, •Br	Loss of a hydrogen radical and bromine.
91	[C7H7]+	•Br, •HNO2	Loss of bromine and nitrous acid, leading to the tropylium ion.

Proposed Fragmentation Pathway for 1-Bromo-2,4-dimethyl-5-nitrobenzene:

© 2026 BenchChem. All rights reserved.

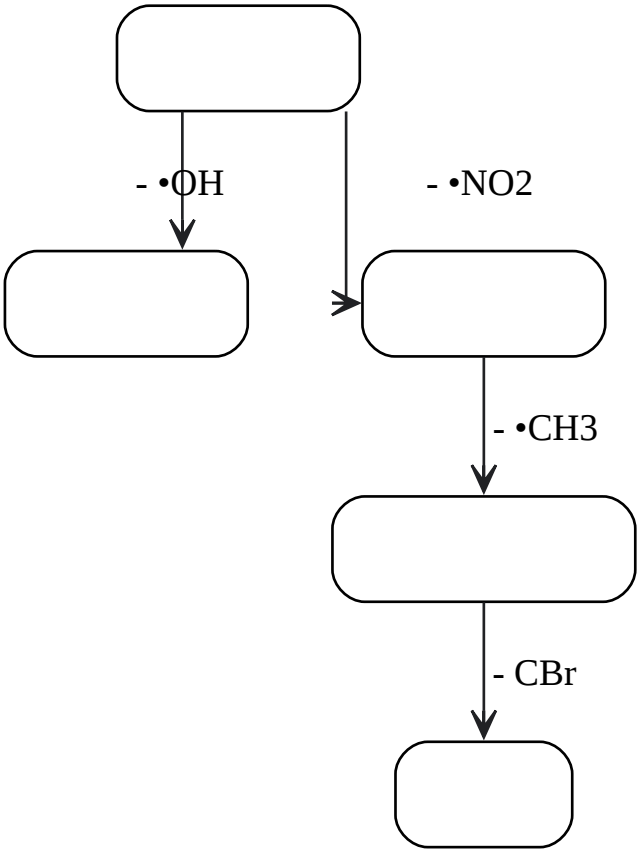

Click to download full resolution via product page

Predicted EI-MS fragmentation of 1-Bromo-2,4-dimethyl-5-nitrobenzene.

Isomer 3: 1-Bromo-4-isopropyl-2-nitrobenzene

The isopropyl group in this isomer provides a highly favored site for benzylic cleavage, leading to the loss of a methyl radical to form a stable secondary benzylic cation. This fragmentation pathway is expected to be very prominent.

Predicted Fragmentation Data for 1-Bromo-4-isopropyl-2-nitrobenzene:

© 2026 BenchChem. All rights reserved.

m/z (Predicted)	Proposed Ion Structure/Formula	Proposed Neutral Loss	Notes
243/245	[C9H10BrNO2]+•	-	Molecular Ion (M+•). Exhibits the M/M+2 isotope pattern.
228/230	[C8H7BrNO2]+•	•CH3	Benzylic cleavage, loss of a methyl radical from the isopropyl group. This should be a very abundant ion.
197/199	[C9H10Br]+•	•NO2	Loss of the nitro group.
182/184	[C8H7Br]+•	•CH3, •NO2	Consecutive loss of a methyl radical and a nitro group.
118	[C9H10NO2]+	•Br	Loss of the bromine radical.
103	[C8H7NO2]+•	•Br, •CH3	Loss of bromine and a methyl radical.
91	[C7H7]+	•Br, C2H3NO2	Loss of bromine and the remaining side chain to form the tropylium ion.

Proposed Fragmentation Pathway for 1-Bromo-4-isopropyl-2-nitrobenzene:

© 2026 BenchChem. All rights reserved.

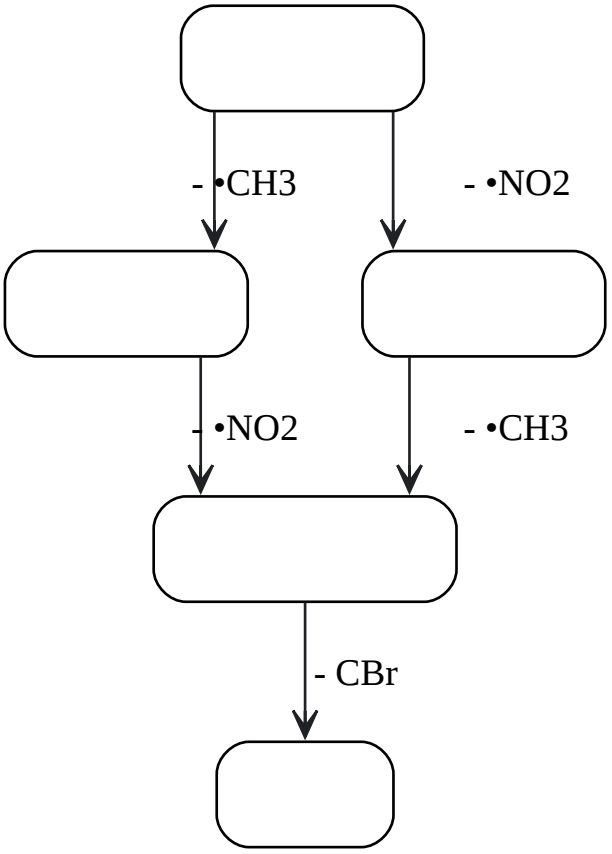

Click to download full resolution via product page

Predicted EI-MS fragmentation of 1-Bromo-4-isopropyl-2-nitrobenzene.

Comparative Summary and Differentiating Ions

The primary differences in the fragmentation patterns of these three isomers arise from the nature and position of the alkyl substituents.

© 2026 BenchChem. All rights reserved.

Isomer	Key Differentiating Fragmentation Pathway	Expected Abundance of Key Fragments
4-Bromo-1-ethyl-2-nitrobenzene	Benzylic cleavage leading to the loss of a methyl radical (•CH3) from the ethyl group.	A prominent ion at m/z 228/230.
1-Bromo-2,4-dimethyl-5-nitrobenzene	Potential for ortho effect leading to the loss of a hydroxyl radical (•OH).	A characteristic ion at m/z 226/228.
1-Bromo-4-isopropyl-2-nitrobenzene	Highly favorable benzylic cleavage with the loss of a methyl radical (•CH3) from the isopropyl group.	A very abundant, likely base peak, at m/z 228/230.

By comparing the relative abundances of the ions at m/z 228/230 and the presence or absence of an ion at m/z 226/228, a clear distinction between these isomers can be made. The isopropyl-substituted isomer is expected to show the most significant peak at m/z 228/230 due to the formation of a more stable secondary benzylic cation compared to the primary one from the ethyl-substituted isomer.

Experimental Protocol: Electron Ionization Mass Spectrometry

A standard protocol for acquiring electron ionization mass spectra for compounds like the isomers of C9H10BrNO2 is as follows:

1. Sample Preparation:

- Dissolve approximately 1 mg of the purified compound in 1 mL of a volatile organic solvent such as methanol or acetonitrile.
- If using Gas Chromatography for sample introduction, dilute the stock solution to a working concentration of 1-10 µg/mL.

2. Instrumentation:

© 2026 BenchChem. All rights reserved.

- Mass Spectrometer: A quadrupole, time-of-flight (TOF), or magnetic sector mass spectrometer equipped with an electron ionization source.
- Inlet System: Gas Chromatography (GC) interface is preferred for separation of isomers and sample introduction. A direct insertion probe can be used for pure samples.

3. GC-MS Conditions (Typical):

- GC Column: A non-polar or medium-polarity capillary column (e.g., DB-5ms, HP-5ms).
- Injection Volume: 1 µL.
- Injector Temperature: 250-280°C.
- Oven Temperature Program: Start at a low temperature (e.g., 50-70°C), hold for 1-2 minutes, then ramp at 10-20°C/min to a final temperature of 280-300°C.
- Carrier Gas: Helium at a constant flow rate (e.g., 1 mL/min).

4. Mass Spectrometer Conditions:

- Ionization Mode: Electron Ionization (EI).
- Ionization Energy: 70 eV.
- Source Temperature: 230°C.
- Mass Range: m/z 40-400.
- Scan Rate: 2-3 scans/second.

5. Data Analysis:

- Acquire the mass spectrum for each isomer.
- Identify the molecular ion peak, paying attention to the M/M+2 isotopic pattern for bromine.
- Analyze the fragmentation pattern and compare the relative abundances of the key fragment ions as detailed in this guide.

© 2026 BenchChem. All rights reserved.

Workflow for Isomer Differentiation:

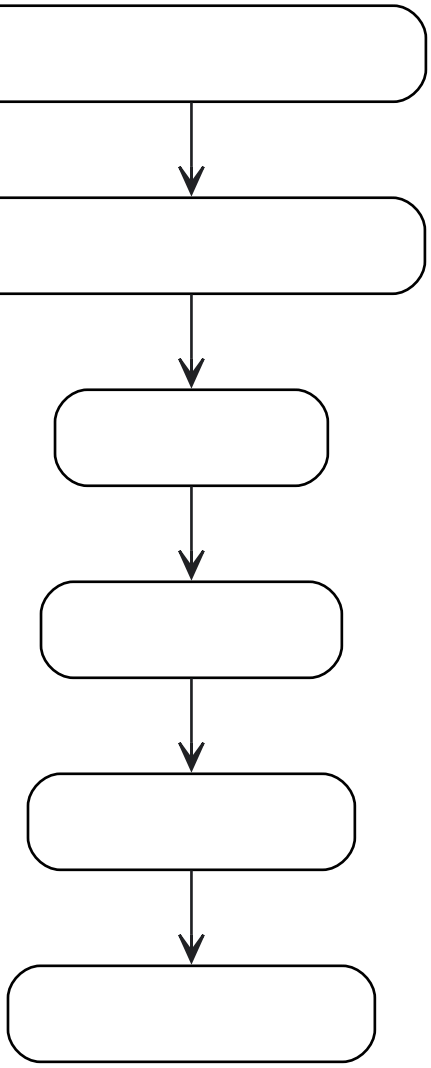

Click to download full resolution via product page

General workflow for isomer analysis by GC-EI-MS.

This predictive guide illustrates how a systematic analysis of mass spectral fragmentation patterns can be a powerful strategy for the structural elucidation and differentiation of challenging isomers. While the predictions are based on well-established principles, experimental verification is always recommended for confirmation.

References

- PubChem. 1-Bromo-4-isopropyl-2-nitrobenzene. [Link]

© 2026 BenchChem. All rights reserved.

- NIST. 2,6-Dibromo-4-nitrotoluene. In: NIST Chemistry WebBook. [Link]
- Yinon, J. Mass Spectra of Nitroarenes. ACS Publications. [Link]
- LibreTexts. Mass Spectrometry - Fragmentation. [Link]
- PubMed. Quantitative Analysis of Nitrotoluene Isomer Mixtures Using Femtosecond Time-Resolved Mass Spectrometry. [Link]
- YouTube. The mass spectrum of 1 ethyl 4 nitrobenzene B is shown in Figure 1 Assign signals highlighted with. [Link]
- Sulzer, P., et al. Identification of Isomers of Nitrotoluene via Free Electron Attachment. Analytical Chemistry. [Link]
- PubChem. 2-bromo-4-nitrotoluene. [Link]
- Wikipedia. Nitro compound. [Link]
- Doc Brown's Chemistry. C8H10 mass spectrum of ethylbenzene fragmentation pattern. [Link]

Need Custom Synthesis?

BenchChem offers custom synthesis for rare earth carbides and specific isotopiclabeling.

Email: info@benchchem.com or Request Quote Online.

Sources

- 1. asdlib.org [asdlib.org]
- 2. pdf.benchchem.com [pdf.benchchem.com]
- 3. C8H10 mass spectrum of ethylbenzene fragmentation pattern of m/z m/e ions for analysis and identification of ethylbenzene image diagram doc brown's advanced organic chemistry revision notes [docbrown.info]
- To cite this document: BenchChem. [Distinguishing Isomers of C9H10BrNO2: A Predictive Guide to Mass Spectrometry Fragmentation Patterns]. BenchChem, [2026]. [Online PDF].

© 2026 BenchChem. All rights reserved.

Available at: [https://www.benchchem.com/product/b3094279/docs#distinguishing-isomers-of-c9h10brno2-a-predictive-guide-to-mass-spectrometry-fragmentation-patterns]

Disclaimer & Data Validity:

The information provided in this document is for Research Use Only (RUO) and is strictly not intended for diagnostic or therapeutic procedures. While BenchChem strives to provide accurate protocols, we make no warranties, express or implied, regarding the fitness of this product for every specific experimental setup.

Technical Support: The protocols provided are for reference purposes. Unsure if this reagent suits your experiment?

Need Industrial/Bulk Grade? Request Custom Synthesis Quote

BenchChem

Our mission is to be the trusted global source of essential and advanced chemicals, empowering scientists and researchers to drive progress in science and industry.

Contact

Address: 3281 E Guasti Rd

Ontario, CA 91761, United States

Phone: (601) 213-4426

Email: info@benchchem.com

Contact our Ph.D. Support Team for a compatibility check