Technical Support Center: Propargyl-PEG4-mesyl ester

Author: BenchChem Technical Support Team. **Date**: April 2026

Compound of Interest	
Compound Name:	*Propargyl-PEG4-mesyl ester*
CAS No.:	*1233816-83-5*
Cat. No.:	*B3092664*

Get Quote

This guide provides researchers, scientists, and drug development professionals with essential information for preventing the hydrolysis of **Propargyl-PEG4-mesyl ester**, a bifunctional linker used in bioconjugation and click chemistry.[1][2]

Frequently Asked Questions (FAQs)

Q1: What is **Propargyl-PEG4-mesyl ester**?

Propargyl-PEG4-mesyl ester is a chemical compound featuring a terminal alkyne (propargyl group) for use in copper-catalyzed click chemistry reactions and a mesyl (methanesulfonyl) group.[1][2] The mesyl group is an excellent leaving group, making it highly reactive towards nucleophiles in substitution reactions.[1][2] The polyethylene glycol (PEG) spacer increases the molecule's solubility in aqueous environments.[2]

Q2: Why is this compound susceptible to hydrolysis?

The susceptibility to hydrolysis stems from the methanesulfonate (mesyl) group, which is a sulfonate ester.[3] This group is highly electrophilic, making the ester prone to nucleophilic

© 2026 BenchChem. All rights reserved.

attack by water.[3] This reaction, known as hydrolysis, cleaves the ester bond, replacing the mesyl group with a hydroxyl group (-OH).

Q3: What are the primary factors that cause hydrolysis?

The main factors that accelerate the hydrolysis of sulfonate esters are:

- Presence of Water: Water acts as the nucleophile that attacks the ester. The rate of hydrolysis is dramatically increased in the presence of water.[4]
- pH: Hydrolysis can be catalyzed by both acidic and basic conditions.[5][6] For sulfonate esters, hydrolysis rates can be significantly faster at basic pH compared to neutral or acidic pH.[7]
- Temperature: Higher temperatures provide the necessary activation energy for the hydrolysis reaction to occur, thus increasing the rate of degradation.[8]

Q4: What are the chemical products of hydrolysis?

When **Propargyl-PEG4-mesyl ester** hydrolyzes, it breaks down into two products: Propargyl-PEG4-alcohol and methanesulfonic acid. This conversion results in the loss of the reactive mesyl group, rendering the compound ineffective for its intended nucleophilic substitution reactions.

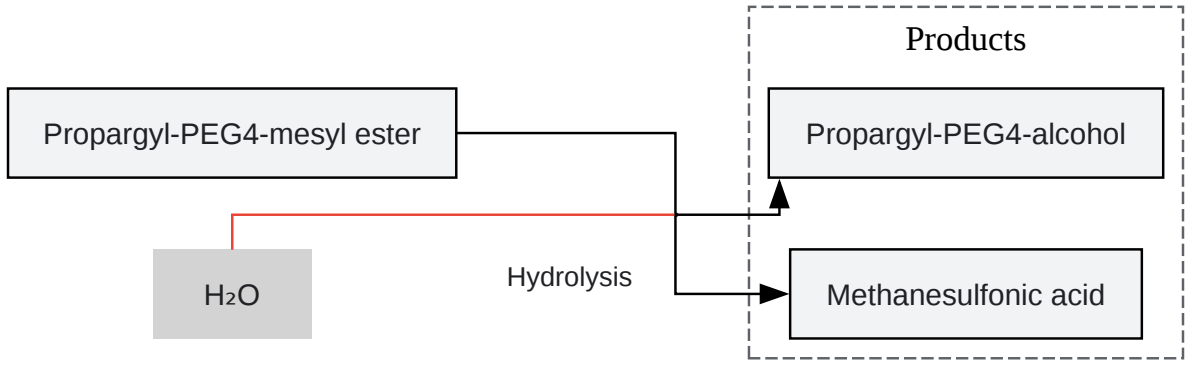

Click to download full resolution via product page

Caption: Hydrolysis pathway of **Propargyl-PEG4-mesyl ester**.

© 2026 BenchChem. All rights reserved.

Q5: How can I detect if my reagent has hydrolyzed?

Hydrolysis can be detected by analytical techniques that separate the parent ester from its more polar alcohol byproduct. The most common method is High-Performance Liquid Chromatography (HPLC), where the hydrolyzed alcohol will typically have a shorter retention time. Nuclear Magnetic Resonance (NMR) spectroscopy can also be used to identify the presence of the alcohol and the absence of the mesyl group.

Troubleshooting Guide

This section addresses common problems that may arise from reagent degradation.

Problem: My conjugation reaction has a low or zero yield.

If you are experiencing poor results in a reaction involving the mesyl group (e.g., conjugation to a thiol or amine), reagent hydrolysis is a likely cause. Follow this troubleshooting workflow:

© 2026 BenchChem. All rights reserved.

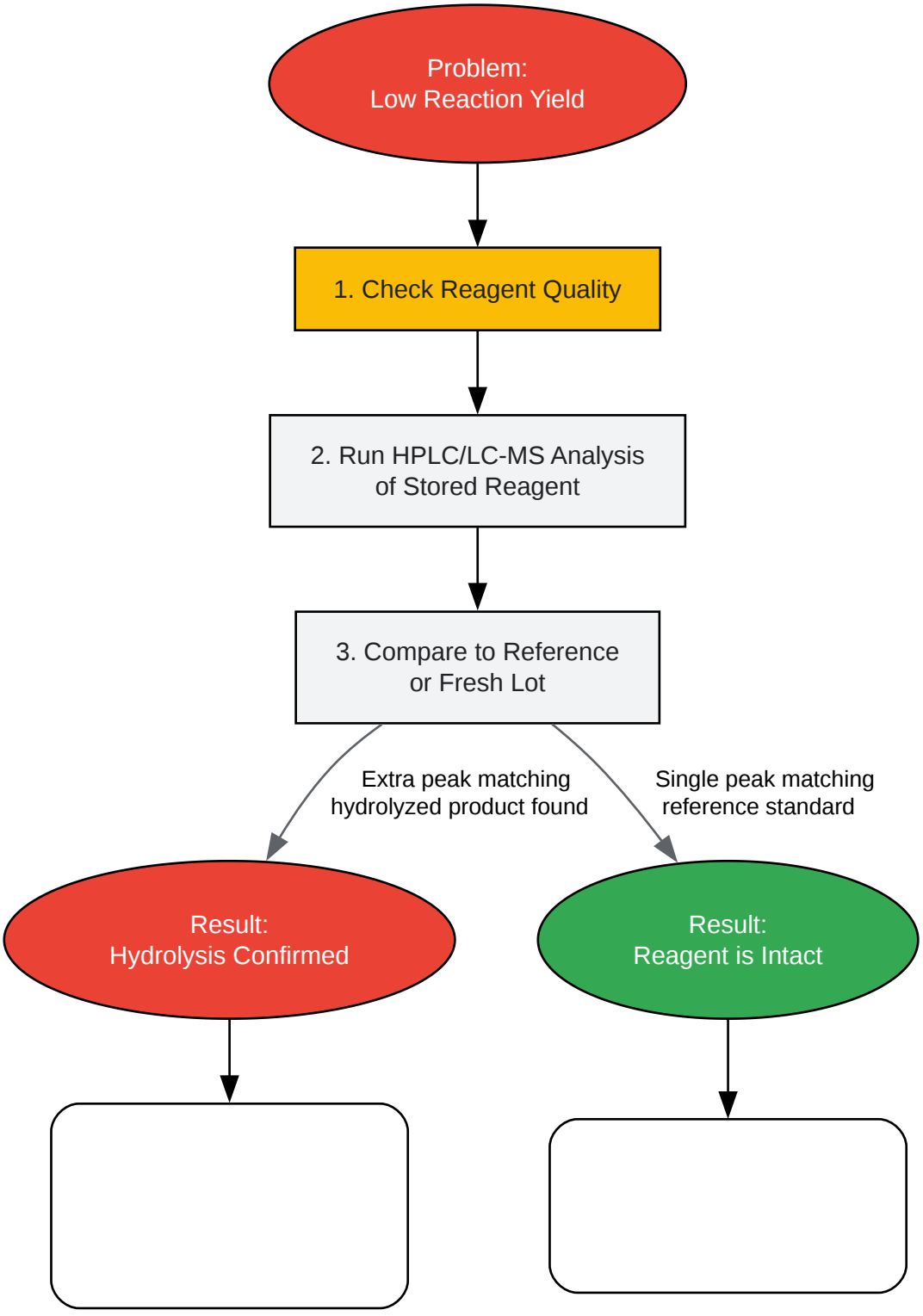

Click to download full resolution via product page

Caption: Workflow for troubleshooting low reaction yields.

Problem: I see an unexpected peak/spot in my analytical results (HPLC, TLC).

© 2026 BenchChem. All rights reserved.

An unexpected, more polar species is often the hydrolyzed Propargyl-PEG4-alcohol.

- Verification: To confirm, you can intentionally hydrolyze a small aliquot of your starting material (e.g., by dissolving in water with a trace of mild base and warming gently) and run it as a standard to see if the retention times match.
- Solution: If hydrolysis is confirmed, the reagent batch is compromised and should be discarded. Ensure that new batches are stored under strictly anhydrous conditions.

Prevention and Best Practices

Proactive measures are critical to maintaining the integrity of **Propargyl-PEG4-mesyl ester**.

© 2026 BenchChem. All rights reserved.

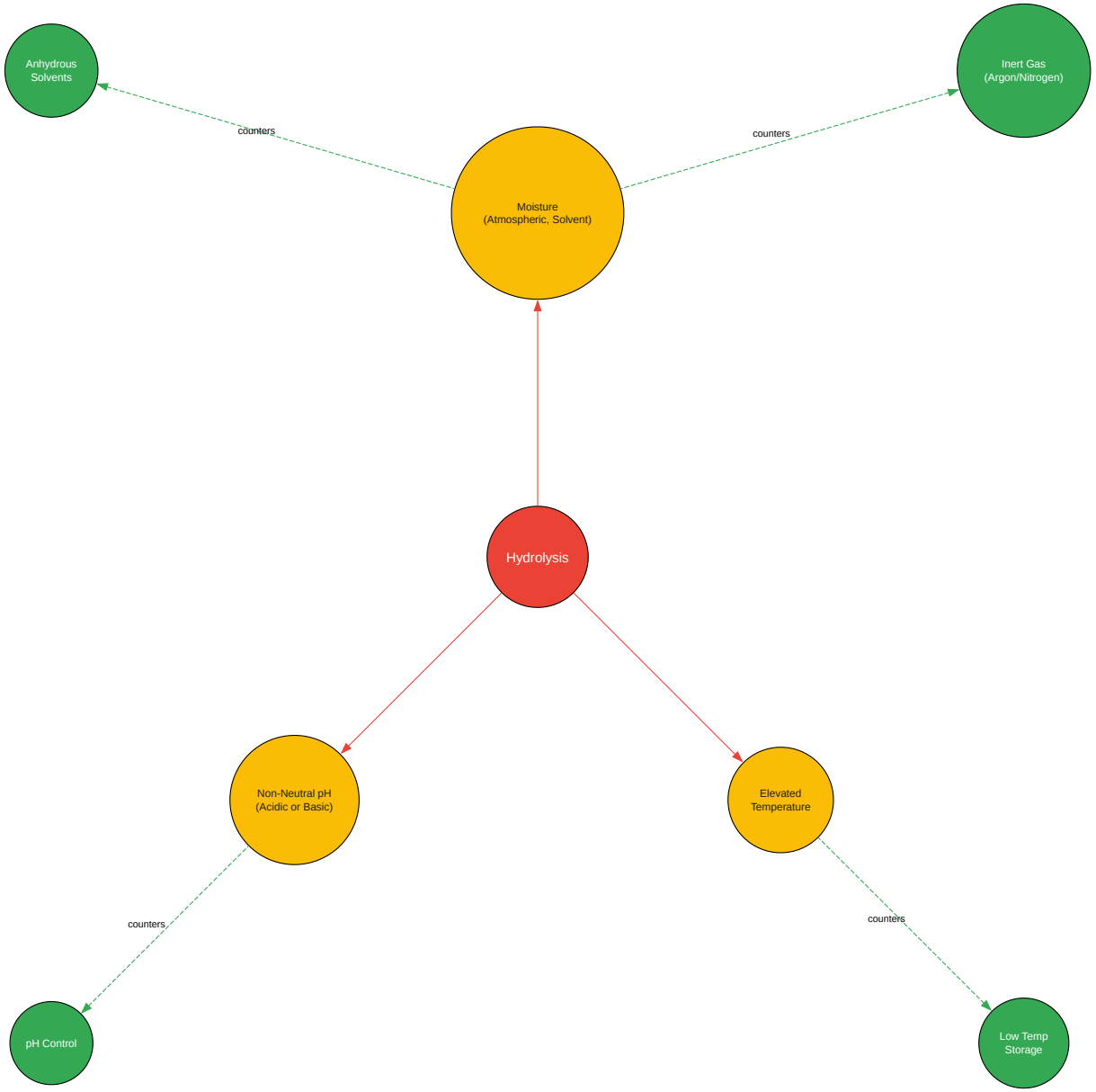

Click to download full resolution via product page

Caption: Factors influencing hydrolysis and their countermeasures.

© 2026 BenchChem. All rights reserved.

Storage and Handling

Proper storage is the most effective way to prevent hydrolysis.[9][10][11]

Parameter	Recommendation	Rationale
Temperature	-20°C or lower	Reduces the rate of chemical degradation.[8]
Atmosphere	Store under an inert gas (Argon or Nitrogen)	Displaces atmospheric moisture and oxygen, preventing hydrolysis and oxidation.
Container	Tightly sealed vial with a secure cap (e.g., septum-capped)	Prevents moisture from entering the container during storage and handling.[11]
Location	Dry, dedicated chemical storage area. Avoid frost-free freezers.	Frost-free cycles can introduce temperature fluctuations and moisture.[10]

Use in Experiments

- Acclimatization: Before opening, allow the vial to warm to room temperature in a desiccator. This prevents atmospheric moisture from condensing on the cold reagent.
- Solvents: Always use high-purity, anhydrous solvents. Solvents from a freshly opened bottle or those dried using molecular sieves are recommended.
- Inert Atmosphere: When preparing solutions, use an inert atmosphere glove box or standard Schlenk line techniques to minimize exposure to air.

Experimental Protocols

Protocol 1: Monitoring Hydrolysis by HPLC

This protocol provides a general method to assess the purity of **Propargyl-PEG4-mesyl ester**.

- Sample Preparation:

- Carefully prepare a stock solution of the ester at ~1 mg/mL in anhydrous acetonitrile.
- Immediately dilute to a working concentration of ~50 µg/mL using the mobile phase.
- Cap the analysis vial tightly and place it in the autosampler.

- HPLC Conditions (Illustrative Example):
  - Column: C18 reverse-phase, 2.1 x 50 mm, 1.8 µm particle size.
  - Mobile Phase A: 0.1% Formic Acid in Water.
  - Mobile Phase B: 0.1% Formic Acid in Acetonitrile.
  - Gradient: Start at 5% B, ramp to 95% B over 5 minutes, hold for 1 minute, return to 5% B and re-equilibrate.
  - Flow Rate: 0.4 mL/min.
  - Column Temperature: 40°C.
  - Detection: UV at 210 nm.
- Data Analysis:
  - The **Propargyl-PEG4-mesyl ester** will be the major, less polar peak with a longer retention time.
  - The hydrolyzed product, Propargyl-PEG4-alcohol, will appear as a more polar peak with a shorter retention time.
  - Calculate purity by peak area percentage. A significant secondary peak (>5%) may indicate substantial degradation.

Protocol 2: Recommended Storage and Handling Procedure

© 2026 BenchChem. All rights reserved.

- Receiving: Upon receipt, inspect the container seal for integrity. Immediately place the vial in a sealed secondary container with desiccant and store at -20°C or below.[12]
- Preparation for Use: Transfer the sealed secondary container from the freezer to a desiccator. Allow the vial to equilibrate to ambient temperature for at least 30-60 minutes.
- Dispensing: If possible, perform all manipulations in an inert atmosphere glove box. If not available, uncap the vial briefly in a fume hood with low airflow. Use a clean, dry syringe or pipette to withdraw the required amount.
- Resealing and Storage: Immediately after dispensing, flush the vial headspace with dry argon or nitrogen gas, securely recap, and return it to the secondary container for storage in the freezer.[13]

Need Custom Synthesis?

BenchChem offers custom synthesis for rare earth carbides and specific isotopiclabeling.

Email: info@benchchem.com or Request Quote Online.

References

- 1. medchemexpress.com [medchemexpress.com]
- 2. Propargyl-PEG4-Ms, 173205-72-6 | BroadPharm [broadpharm.com]
- 3. researchgate.net [researchgate.net]
- 4. enovatia.com [enovatia.com]
- 5. Effects of neighboring sulfides and pH on ester hydrolysis in thiol-acrylate photopolymers - PMC [pmc.ncbi.nlm.nih.gov]
- 6. researchgate.net [researchgate.net]
- 7. researchgate.net [researchgate.net]
- 8. researchgate.net [researchgate.net]
- 9. blog.idrenvironmental.com [blog.idrenvironmental.com]
- 10. m.youtube.com [m.youtube.com]
- 11. envirotechint.com [envirotechint.com]

- 12. iedu.mui.ac.ir [iedu.mui.ac.ir]
- 13. csuohio.edu [csuohio.edu]
- To cite this document: BenchChem. [Technical Support Center: Propargyl-PEG4-mesyl ester]. BenchChem, [2026]. [Online PDF]. Available at: [https://www.benchchem.com/product/b3092664/docs#technical-support-center-propargyl-peg4-mesyl-ester]

Disclaimer & Data Validity:

The information provided in this document is for Research Use Only (RUO) and is strictly not intended for diagnostic or therapeutic procedures. While BenchChem strives to provide accurate protocols, we make no warranties, express or implied, regarding the fitness of this product for every specific experimental setup.

Technical Support: The protocols provided are for reference purposes. Unsure if this reagent suits your experiment?

Need Industrial/Bulk Grade? Request Custom Synthesis Quote

BenchChem

Our mission is to be the trusted global source of essential and advanced chemicals, empowering scientists and researchers to drive progress in science and industry.

Contact

Address: 3281 E Guasti Rd

Ontario, CA 91761, United States

Phone: (601) 213-4426

Email: info@benchchem.com

Contact our Ph.D. Support Team for a compatibility check

© 2026 BenchChem. All rights reserved.