Performance metrics for next-generation miniature atomic clocks

Author: BenchChem Technical Support Team. **Date**: April 2026

Compound of Interest

Compound Name:	*YM17E*
CAS No.:	*124884-99-7*
Cat. No.:	*B3061551*

Get Quote

A Comparative Guide to Next-Generation Miniature Atomic Clocks

For researchers, scientists, and drug development professionals requiring the pinnacle of timing precision and stability in compact form factors, the landscape of miniature atomic clocks is rapidly evolving. Next-generation devices offer significant improvements in size, weight, and power (SWaP) without compromising, and in many cases enhancing, core performance metrics. This guide provides an objective comparison of leading miniature atomic clocks, supported by available performance data and an overview of the experimental methodologies used to characterize them.

Performance Metrics: A Head-to-Head Comparison

The selection of a miniature atomic clock is a critical decision, balancing the trade-offs between stability, power consumption, and physical footprint. The following tables summarize the key performance indicators for three leading next-generation miniature atomic clocks: the Microchip MAC-SA5X, the Microchip LN-CSAC SA65-LN, and the Safran MIRA.

© 2026 BenchChem. All rights reserved.

General Performance Metrics	Microchip MAC-SA5X (SA55)	Microchip LN-CSAC SA65-LN	Safran MIRA (Ruggedized)
Clock Type	Miniaturized Rubidium Atomic Clock	Low-Noise Chip-Scale Atomic Clock	Micro Rubidium Atomic Clock
Output Frequency	10 MHz	10 MHz	10 MHz
Warm-up Time	< 2 minutes (lock over full temp range)	Not specified	< 2 minutes
Monthly Aging Rate	< 5.0E-11[1][2]	< 0.9 ppb/mo (< 9 x 10^{-10})[3]	Not specified
Frequency Retrace	Not specified	Not specified	< 1 x 10^{-10}[4]
Holdover	< 200 ns over 24 hours (typical, static temp)[1]	Not specified	< 500 ns within 24 hours (at fixed temp)

Stability Metrics	Microchip MAC-SA5X (SA55)	Microchip LN-CSAC SA65-LN	Safran MIRA
Short-Term Stability (Allan Deviation, τ=1s)	< 1.5E-11	< 1E-11	< 5 x 10^{-12}
Frequency Stability vs. Temperature	< 5.0E-11 (-40°C to +75°C)	< ±0.3 ppb (total deviation)	1 x 10^{-10} (-20°C to +70°C)

Phase Noise	Microchip MAC-SA5X (SA55)	Microchip LN-CSAC SA65-LN	Safran MIRA
@ 10 Hz offset	Not specified	< -120 dBc/Hz	Not specified
@ 100 Hz offset	Not specified	Not specified	-120 dBc/Hz
@ 1 kHz offset	Not specified	Not specified	-135 dBc/Hz
@ 10 kHz offset	Not specified	Not specified	-140 dBc/Hz

© 2026 BenchChem. All rights reserved.

Physical & Environmental Specifications	Microchip MAC-SA5X	Microchip LN-CSAC SA65-LN	Safran MIRA (Ruggedized)
Size (Volume)	47 cc	Not specified	~40 cc
Dimensions (L x W x H)	51 x 51 x 18 mm	Not specified, height < 0.5 in	50.8 x 50.8 x 16 mm
Weight	Not specified	Not specified	Not specified
Power Consumption (Steady State)	6.3 W	< 295 mW	0.5 W (standard), 1.5 W (high performance)
Operating Temperature	-40°C to +75°C	-40°C to +80°C	-40°C to +80°C

Experimental Protocols

The precise characterization of miniature atomic clocks is fundamental to understanding their performance. While manufacturers' detailed internal testing protocols are proprietary, the general methodologies for key performance metrics are well-established in the field of time and frequency measurement.

Allan Deviation (Frequency Stability) Measurement

The Allan Deviation (ADEV) is the standard metric for assessing the frequency stability of an oscillator in the time domain. It quantifies how the average frequency of a clock changes over different averaging times (τ).

General Methodology:

- Reference Clock: A high-stability reference frequency standard is required. This is typically a laboratory-grade Cesium or Rubidium standard, such as the SRS FS725 Rubidium Frequency Standard, which provides a more stable signal than the device under test (DUT).
- Phase Comparison: The output signal of the miniature atomic clock (DUT) is compared against the reference clock's signal. A phase comparator or a time interval counter measures the phase difference between the two signals over a prolonged period.

© 2026 BenchChem. All rights reserved.

- Data Acquisition: The phase difference data is continuously recorded at a regular sampling interval. This raw data represents the phase error of the DUT relative to the reference.
- Calculation: The collected phase data is then used to calculate the fractional frequency deviation. The Allan Deviation is computed from this frequency data for various averaging times (τ). Specialized software is often used to perform these calculations and plot the resulting ADEV curve. The overlapping Allan deviation is a common statistical tool used for this evaluation.
- Environmental Control: Throughout the measurement, the DUT is maintained in a temperature- and vibration-controlled environment to minimize external influences on its stability.

Phase Noise Measurement

Phase noise is a measure of the short-term random frequency fluctuations of a signal, observed in the frequency domain. It is expressed in dBc/Hz at various frequency offsets from the carrier signal.

General Methodology:

- Instrumentation: A specialized phase noise test system, such as the Symmetricom 3120A Phase Noise Test Probe, or a high-performance spectrum analyzer with phase noise measurement capabilities is used.
- Reference Source: A clean, low-noise reference oscillator is used as a local oscillator (LO) within the measurement system. The phase noise of the reference source must be lower than that of the DUT to ensure accurate measurement.
- Phase Detection: The signal from the DUT and the reference signal are fed into a phase detector (mixer). The output of the phase detector is a voltage proportional to the phase difference between the two signals.
- Spectrum Analysis: The output of the phase detector, which represents the phase noise, is then analyzed by a spectrum analyzer. The resulting power spectral density is normalized to a 1 Hz bandwidth and expressed in dB relative to the carrier power (dBc/Hz).

© 2026 BenchChem. All rights reserved.

- Cross-Correlation (for higher sensitivity): To measure very low phase noise levels, a cross-correlation technique can be employed. This involves using two parallel measurement channels and averaging the results to reduce the measurement system's noise floor.

Temperature Stability (Tempco) Measurement

This test evaluates the frequency stability of the atomic clock over its specified operating temperature range.

General Methodology:

- Environmental Chamber: The miniature atomic clock is placed inside a thermal chamber capable of precise temperature control.
- Frequency Monitoring: The output frequency of the clock is continuously monitored using a high-resolution frequency counter, referenced to a stable external standard.
- Temperature Cycling: The temperature inside the chamber is slowly swept across the clock's specified operating range (e.g., -40°C to +75°C). The rate of temperature change is kept low to ensure the clock reaches thermal equilibrium at each measurement point.
- Data Logging: The output frequency and the chamber temperature are logged simultaneously throughout the test.
- Analysis: The collected data is plotted to show the frequency deviation as a function of temperature. The temperature coefficient of frequency (tempco) is then calculated from this data.

Visualizing the Logic

To better understand the operational and evaluation frameworks of miniature atomic clocks, the following diagrams, generated using the DOT language, illustrate key logical relationships.

© 2026 BenchChem. All rights reserved.

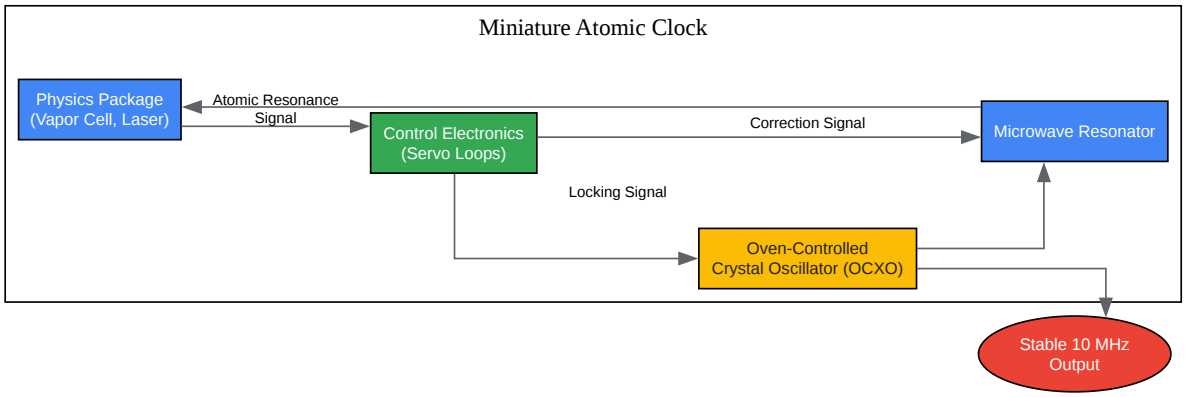

Click to download full resolution via product page

Core components and their interaction in a miniature atomic clock.

© 2026 BenchChem. All rights reserved.

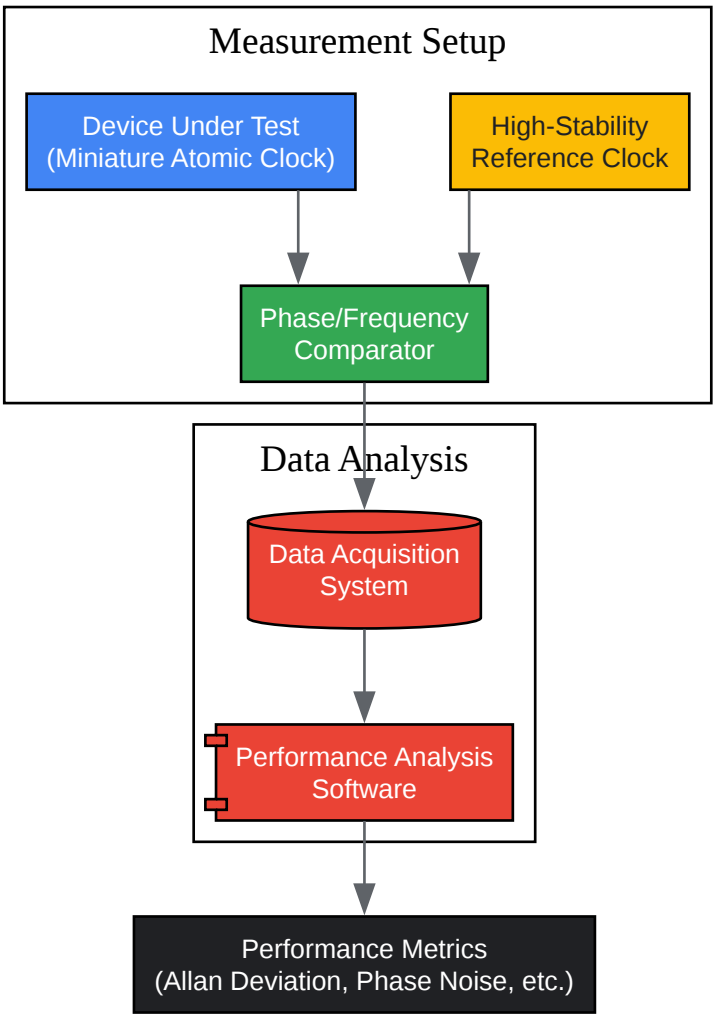

Click to download full resolution via product page

A generalized workflow for performance characterization.

Need Custom Synthesis?

BenchChem offers custom synthesis for rare earth carbides and specific isotopiclabeling.

Email: info@benchchem.com or Request Quote Online.

References

- 1. Miniature Atomic Clock | Microchip Technology [microchip.com]
- 2. milexia.com [milexia.com]

- 3. Microchip Technology Launches Next Generation Low-Noise Chip-Scale Atomic Clock - Inside GNSS - Global Navigation Satellite Systems Engineering, Policy, and Design [insidegnss.com]
- 4. safran-navigation-timing.com [safran-navigation-timing.com]
- To cite this document: BenchChem. [Performance metrics for next-generation miniature atomic clocks]. BenchChem, [2026]. [Online PDF]. Available at: [https://www.benchchem.com/product/b3061551/docs#performance-metrics-for-next-generation-miniature-atomic-clocks]

Disclaimer & Data Validity:

The information provided in this document is for Research Use Only (RUO) and is strictly not intended for diagnostic or therapeutic procedures. While BenchChem strives to provide accurate protocols, we make no warranties, express or implied, regarding the fitness of this product for every specific experimental setup.

Technical Support: The protocols provided are for reference purposes. Unsure if this reagent suits your experiment?

Need Industrial/Bulk Grade? Request Custom Synthesis Quote

BenchChem

Our mission is to be the trusted global source of essential and advanced chemicals, empowering scientists and researchers to drive progress in science and industry.

Contact

Address: 3281 E Guasti Rd

Ontario, CA 91761, United States

Phone: (601) 213-4426

Email: info@benchchem.com

Contact our Ph.D. Support Team for a compatibility check

© 2026 BenchChem. All rights reserved.

© 2026 BenchChem. All rights reserved.