The Azepane Scaffold: A Versatile Framework for Modern Drug Discover

Author: BenchChem Technical Support Team. **Date**: April 2026

Compound of Interest

Compound Name: *1-(3-Chloropropyl)azepane hydrochloride*

CAS No.: *57616-77-0*

Cat. No.: *B3054010*

Get Quote

A Senior Application Scientist's In-depth Technical Guide to the Potential Research Applications of Azepane Derivatives

The seven-membered nitrogen-containing heterocyclic scaffold, azepane, has steadily emerged as a privileged structure in the field of medicinal cher inherent three-dimensional conformation provides a versatile framework for diverse chemical substitutions, enabling the meticulous tuning of physicoc and pharmacokinetic properties.[1] This structural flexibility allows azepane derivatives to interact with a wide array of biological targets, leading to a b spectrum of pharmacological activities.[2] This technical guide provides a comprehensive overview of the burgeoning research applications of azepar derivatives, with a focus on their therapeutic potential in oncology, neurodegenerative diseases, and infectious diseases. We will delve into the synthe strategies, mechanisms of action, and provide field-proven experimental protocols to empower researchers in their quest for novel therapeutics.

The Azepane Core: Synthetic Strategies and Structural Significance

The synthesis of the azepane ring can be accomplished through various strategies, including ring-closing reactions, ring-expansion of smaller cyclic compounds, and multi-step sequences.[3] A notable example is the synthesis of dibenzo[b,f]azepine derivatives, which form the core of several clinica important drugs. A common synthetic route involves the reaction of 5H-dibenzo[b,f]azepine-5-carbonyl chloride with various amines to introduce diver functionalities.[4]

Experimental Protocol: Synthesis of (5H-dibenzo[b,f]azepin-5-yl)(4-phenylpiperazin-1-yl)methanone

This protocol describes a representative synthesis of a dibenzo[b,f]azepine derivative, a key intermediate for various bioactive compounds.

Materials:

- 5H-dibenzo[b,f]azepine-5-carbonyl chloride
- 1-phenylpiperazine
- Triethylamine
- Dry dioxane
- Magnetic stirrer
- Standard laboratory glassware

Procedure:

- In a clean, dry round-bottom flask, dissolve 1-phenylpiperazine (0.64 g, 0.004 mol) and triethylamine (0.4 g, 0.6 mL, 0.004 mol) in 45 mL of dry dio

© 2026 BenchChem. All rights reserved.

- To this solution, add a solution of 5H-dibenzo[b,f]azepine-5-carbonyl chloride (1 g, 0.004 mol) dissolved in 30 mL of dry dioxane dropwise under co magnetic stirring at room temperature.[4] A precipitate of triethylamine hydrochloride will gradually form.
- Stir the reaction mixture for 24 hours at room temperature.
- Work-up the reaction mixture by filtering off the precipitate and concentrating the filtrate under reduced pressure.
- The crude product can be purified by recrystallization from a suitable solvent, such as isopropanol, to yield the desired (5H-dibenzo[b,f]azepin-5-yl) phenylpiperazin-1-yl)methanone.[4]

Characterization: The final product should be characterized using standard analytical techniques such as High-Performance Liquid Chromatography (1H-NMR, 13C-NMR, and Mass Spectrometry (MS) to confirm its identity and purity.[4]

Therapeutic Landscape of Azepane Derivatives

The unique structural features of the azepane scaffold have been exploited to develop potent and selective modulators of various biological targets, le promising applications in several therapeutic areas.

Oncology: Targeting Key Signaling Pathways

Azepane derivatives have demonstrated significant potential as anticancer agents by targeting fundamental cellular processes like cell proliferation ar survival.[2]

Mechanism of Action: Inhibition of the PI3K/Akt Signaling Pathway

The Phosphoinositide 3-kinase (PI3K)/Akt signaling pathway is a critical regulator of cell growth, proliferation, and survival, and its aberrant activation common feature in many cancers.[5] Several azepine derivatives have been designed to inhibit this pathway, thereby inducing apoptosis and halting t progression. These inhibitors can act at various nodes within the pathway, disrupting the downstream signaling cascade that promotes cancer cell sur

© 2026 BenchChem. All rights reserved.

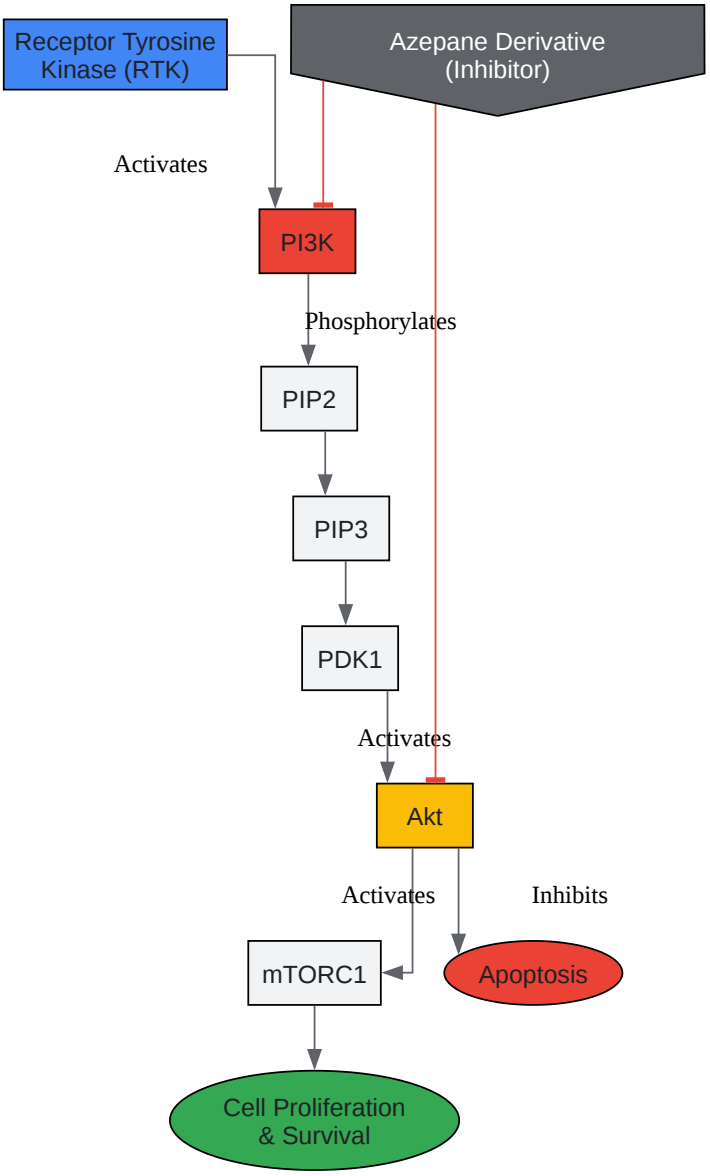

Click to download full resolution via product page

Modulation of the PI3K/Akt Signaling Pathway by Azepane Derivatives.

Mechanism of Action: PTPN2/PTPN1 Inhibition in Cancer Immunotherapy

Protein tyrosine phosphatases PTPN2 and PTPN1 are negative regulators of immune signaling pathways.[6] Their inhibition in cancer cells can enha sensitivity to immune checkpoint inhibitors and promote an anti-tumor immune response.[6][7] Azepane-containing derivatives are being explored as inhibitors of PTPN2 and PTPN1, offering a promising strategy for cancer immunotherapy.[8] By blocking these phosphatases, azepane derivatives ca augment T-cell activation and effector functions, leading to enhanced tumor cell killing.[6][9]

© 2026 BenchChem. All rights reserved.

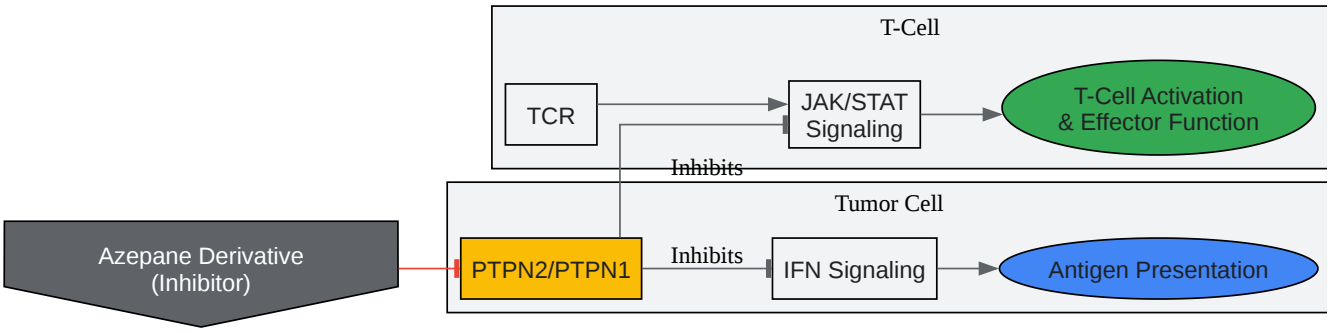

Click to download full resolution via product page

Inhibition of PTPN2/PTPN1 by Azepane Compounds in Cancer Immunotherapy.

Quantitative Data: Anticancer Activity of Azepane Derivatives

The following table summarizes the in vitro cytotoxic activity of representative azepane derivatives against various human cancer cell lines.

Compound	Cell Line	IC50 (µM)	Reference
N-(4-ethoxyphenyl)azepane-1-sulfonamide	MCF-7 (Breast Cancer)	8.5 ± 0.7	[10]
N-(4-ethoxyphenyl)azepane-1-sulfonamide	HCT116 (Colon Cancer)	7.9 ± 0.6	[10]
Dibenzo[b,f]azepine derivative 5e	Leukaemia SR	13.05 ± 0.62	[11]
Pyrrolo[1,2-a]azepine derivative 5b	HCT116 (Colon Cancer)	0.0401	[2]
Pyrrolo[1,2-a]azepine derivative 6	HepG2 (Liver Cancer)	0.0016	[2]

Experimental Protocol: MTT Assay for Cell Viability

The MTT assay is a colorimetric assay for assessing cell metabolic activity and is a standard method for evaluating the cytotoxic potential of novel co [12][13]

Materials:

- Human cancer cell lines (e.g., MCF-7, HCT116)
- Complete cell culture medium
- Azepane derivative stock solution (in DMSO)
- MTT (3-(4,5-dimethylthiazol-2-yl)-2,5-diphenyltetrazolium bromide) solution (5 mg/mL in PBS)
- DMSO
- 96-well plates
- Microplate reader

Procedure:

- Cell Seeding: Seed cancer cells into 96-well plates at an optimal density (e.g., 5 x 10^3 cells/well) and incubate for 24 hours to allow for cell attachm

© 2026 BenchChem. All rights reserved.

- Compound Treatment: Treat the cells with various concentrations of the azepane derivative. Include a vehicle control (DMSO) and a positive contro known cytotoxic agent). Incubate for a specified period (e.g., 72 hours).[1][10]
- MTT Addition: After incubation, add 20 µL of MTT solution to each well and incubate for an additional 4 hours at 37°C.[10] During this time, viable c reduce the yellow MTT to purple formazan crystals.[1]
- Formazan Solubilization: Carefully remove the medium and add 150 µL of DMSO to each well to dissolve the formazan crystals.[10]
- Absorbance Measurement: Measure the absorbance at 570 nm using a microplate reader.[10]
- Data Analysis: Calculate the percentage of cell viability relative to the vehicle-treated control cells. Plot the percentage of viability against the logarit compound concentration to generate a dose-response curve. The IC50 value, the concentration that inhibits 50% of cell growth, can be determined curve using non-linear regression analysis.[10][14][15]

Neurodegenerative Diseases: Targeting Amyloid-β Production

Alzheimer's disease, a progressive neurodegenerative disorder, is characterized by the accumulation of amyloid-beta (Aβ) plaques in the brain.[14] A derivatives have shown promise as inhibitors of β-site amyloid precursor protein cleaving enzyme 1 (BACE1), a key enzyme in the production of Aβ.[

Mechanism of Action: BACE1 Inhibition

BACE1 initiates the cleavage of the amyloid precursor protein (APP), leading to the generation of Aβ peptides.[3][18] By inhibiting BACE1, azepane d can reduce the production of Aβ, thereby potentially slowing the progression of Alzheimer's disease.[1][14]

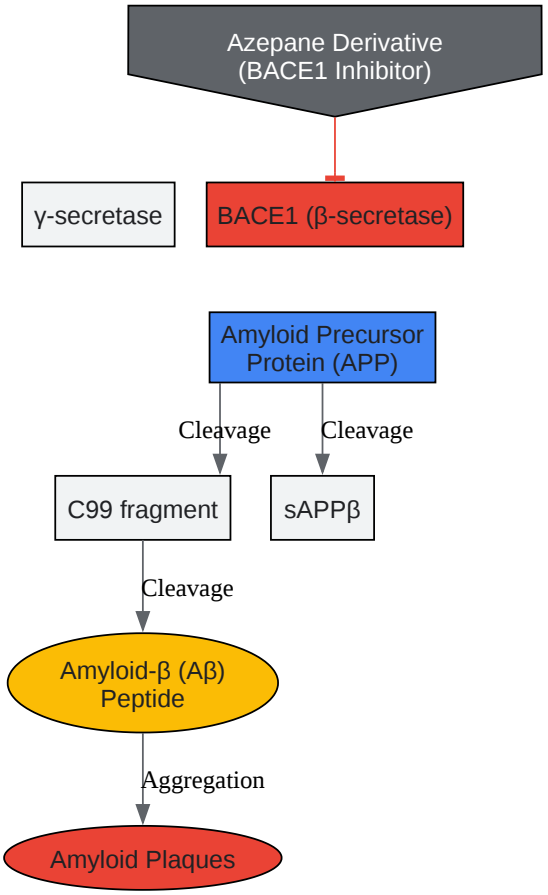

Click to download full resolution via product page

Inhibition of Amyloid-β Production by Azepane-based BACE1 Inhibitors.

© 2026 BenchChem. All rights reserved.

Experimental Protocol: BACE1 Inhibition Assay

This fluorogenic assay measures the ability of a compound to inhibit the enzymatic activity of BACE1.

Materials:

- Recombinant human BACE1 enzyme
- Fluorogenic BACE1 substrate
- Assay buffer
- Azepane derivative test compounds
- Known BACE1 inhibitor (positive control)
- 96-well black plates
- Fluorescence microplate reader

Procedure:

- Reagent Preparation: Prepare serial dilutions of the azepane test compounds and the positive control in assay buffer.
- Assay Setup: In a 96-well black plate, add the assay buffer, the BACE1 enzyme, and the test compound or control.
- Reaction Initiation: Initiate the enzymatic reaction by adding the fluorogenic BACE1 substrate to all wells.
- Incubation: Incubate the plate at 37°C for a specified time (e.g., 60 minutes) in the dark.
- Fluorescence Measurement: Measure the fluorescence intensity using a microplate reader at the appropriate excitation and emission wavelengths 320 nm/Em 405 nm).[19]
- Data Analysis: Calculate the percentage of BACE1 inhibition for each compound concentration relative to the untreated control. Determine the IC5(plotting the percentage of inhibition against the logarithm of the compound concentration and fitting the data to a dose-response curve.

Infectious Diseases: Combating Microbial Resistance

The rise of multidrug-resistant pathogens necessitates the development of novel antimicrobial agents.[20] Azepane derivatives have demonstrated pr activity against a range of bacteria and fungi.[21]

Quantitative Data: Antimicrobial Activity of Azepane Derivatives

The following table presents the minimum inhibitory concentration (MIC) values of a representative azepane derivative against various microbial strai

Compound	Organism	MIC (µg/mL)	Reference
Pyridobenzazepine derivative 8	E. coli	39	[13]
Pyridobenzazepine derivative 8	S. aureus	39	[13]
Pyridobenzazepine derivative 8	P. aeruginosa	78	[13]
Azepanouvaol 8	MRSA	≤ 0.15 µM	[21]
3-amino-3,4-seco-4(23)-en derivative of uvaol 21	MRSA	≤ 0.15 µM	[21]

Experimental Protocol: Minimum Inhibitory Concentration (MIC) Determination

© 2026 BenchChem. All rights reserved.

The broth microdilution method is a standard procedure for determining the MIC of an antimicrobial agent.[22][23]

Materials:

- Bacterial or fungal strains
- Appropriate broth medium (e.g., Mueller-Hinton broth)
- Azepane derivative stock solution
- Sterile 96-well microtiter plates
- Incubator

Procedure:

- Compound Dilution: Prepare serial two-fold dilutions of the azepane derivative in the broth medium in a 96-well plate.[1]
- Inoculum Preparation: Prepare a standardized inoculum of the test microorganism (e.g., ~5 x 10^5 CFU/mL).
- Inoculation: Inoculate each well containing the compound dilutions with the microbial suspension. Include a growth control (no compound) and a st control (no inoculum).
- Incubation: Incubate the plate at an appropriate temperature (e.g., 37°C) for 18-24 hours.
- MIC Determination: The MIC is the lowest concentration of the compound that completely inhibits visible growth of the microorganism.[22] This can determined visually or by measuring the optical density.

Conclusion and Future Directions

The azepane scaffold represents a highly versatile and promising platform for the discovery of novel therapeutic agents. Its inherent structural flexibili for the design of potent and selective modulators of a wide range of biological targets. The research applications highlighted in this guide, from oncolo neurodegenerative diseases to infectious diseases, underscore the significant potential of azepane derivatives in addressing unmet medical needs.

Future research in this area should continue to focus on the structure-activity relationship studies to further optimize the potency and selectivity of the compounds.[1] A deeper understanding of their mechanisms of action and safety profiles will be crucial for their successful translation into clinical app The continued exploration of novel synthetic methodologies will also be vital for expanding the chemical diversity of azepane libraries, paving the way discovery of the next generation of azepane-based therapeutics.

References

- Azepane-Containing Compounds: A Comprehensive Technical Review for Drug Discovery. (2025). BenchChem.
- Pharmaceutical significance of azepane based motifs for drug discovery: A critical review. (2026). ResearchGate.
- Comparative Analysis of the Anticancer Efficacy of N-(4-ethoxyphenyl)azepane-1-sulfonamide. (2025). BenchChem.
- Recent Advances on the Synthesis of Azepane-Based Compounds. (n.d.). ResearchGate.
- Application Notes and Protocols for Assessing the Anticancer Activity of Azepane-2,5-dione Derivatives. (2025). BenchChem.
- BACE1 Assay Kit. (n.d.). BPS Bioscience.
- Evaluation of A-azepano-triterpenoids and related derivatives as antimicrobial and antiviral agents. (2021). PMC.
- MTT assay protocol. (n.d.). Abcam.
- Synthesis of 5H-dibenzo(b,f)azepine-5-carboxylic acid [3-chloro-2- (substitutedphenyl). (n.d.). NISCair. Retrieved from https://vertexaisearch.cloud.google.com/grounding-api-redirect/AUZIYQE8AKqVlinyroHxHNw-5AfzwO8AEXutAxwpVP88K8SikzRr_V_EV4mf0rKNfdzrkYLLBs4Y82ABihdXpI6UKs9JIy4nsBFbljkM2tVhKYplbwwNEOybiQx7CMnV_7Nsa6Op8s4OTH2mFK92pnRv8AR17EJJniWJSG_ffTxsPjmFQRqvHAYBUlD
- Application Notes and Protocols for Determining Edotecarin IC50 Values using MTT Assay. (2025). BenchChem.
- The role of APP and BACE1 trafficking in APP processing and amyloid-β generation. (2013). PMC.
- PTPN2/1. (n.d.). AbbVie Science.
- How-to guide: Minimum Inhibitory Concentration (MIC). (2016). Emery Pharma.
- Synthesis and antimicrobial activity of azepine and thiepine derivatives. (2016). ResearchGate.

© 2026 BenchChem. All rights reserved.

- The PTPN1 and PTPN2 phosphatases are Cooperative Regulators of Cancer Cell Immune Evasion. (2025). Sciety.
- How to Analyse MTT/MTS Assay Data and IC50 using Excel. (2023). YouTube.
- SYNTHESIS OF NEW DIBENZO[b,f]AZEPINE DERIVATIVES. (n.d.). Annals of the University of Bucharest.
- Cancer immunotherapy candidate provokes powerful dual response in cancer and immune cells. (2023). Broad Institute.
- Uncovering the individual immunotherapeutic roles of PTPN1 and PTPN2 in T cells during dual inhibition. (2025). PMC.
- Discovery of BACE1 Inhibitors for the Treatment of Alzheimer's Disease. (2017). IntechOpen.
- Practical Guide to Interpretation of Antimicrobial Susceptibility Test. (2017). WSAVA 2017 Congress.
- Design and synthesis of novel rigid dibenzo[b,f]azepines through ring closure technique as promising anticancer candidates against leukaemia and selective topoisomerase II inhibitors and DNA intercalators. (2023). PMC.
- What are BACE1 inhibitors and how do they work?. (2024). Patsnap Synapse.
- Foundational Research on the PI3K/Akt Signaling Pathway of Anticancer Agent 41. (2025). BenchChem.

Need Custom Synthesis?

BenchChem offers custom synthesis for rare earth carbides and specific isotopiclabeling.

Email: info@benchchem.com or Request Quote Online.

Sources

- 1. researchgate.net [researchgate.net]
- 2. pdf.benchchem.com [pdf.benchchem.com]
- 3. The role of APP and BACE1 trafficking in APP processing and amyloid-β generation - PMC [pmc.ncbi.nlm.nih.gov]
- 4. revroum.lew.ro [revroum.lew.ro]
- 5. pdf.benchchem.com [pdf.benchchem.com]
- 6. PTPN2/1 [stage.abbviescience.com]
- 7. The PTPN1 and PTPN2 phosphatases are Cooperative Regulators of Cancer Cell Immune Evasion | Sciety [sciety.org]
- 8. Cancer immunotherapy candidate provokes powerful dual response in cancer and immune cells | Broad Institute [broadinstitute.org]
- 9. Uncovering the individual immunotherapeutic roles of PTPN1 and PTPN2 in T cells during dual inhibition - PMC [pmc.ncbi.nlm.nih.gov]
- 10. pdf.benchchem.com [pdf.benchchem.com]
- 11. Design and synthesis of novel rigid dibenzo[b,f]azepines through ring closure technique as promising anticancer candidates against leukaemia acting as selective topoisomerase II inhibitors and DNA intercalators - PMC [pmc.ncbi.nlm.nih.gov]
- 12. pnas.org [pnas.org]
- 13. researchgate.net [researchgate.net]
- 14. pdf.benchchem.com [pdf.benchchem.com]
- 15. youtube.com [youtube.com]
- 16. Unlocking Visual Pathways: A Friendly Guide to Graphviz and the DOT Language - Oreate AI Blog [oreateai.com]
- 17. biorxiv.org [biorxiv.org]
- 18. mdpi.com [mdpi.com]
- 19. researchgate.net [researchgate.net]
- 20. Unlocking Signaling Pathways: A Friendly Guide to Graphviz DOT Language - Oreate AI Blog [oreateai.com]
- 21. Evaluation of A-azepano-triterpenoids and related derivatives as antimicrobial and antiviral agents - PMC [pmc.ncbi.nlm.nih.gov]
- 22. emerypharma.com [emerypharma.com]
- 23. Practical Guide to Interpretation of Antimicrobial Susceptibility Test - WSAVA 2017 Congress - VIN [vin.com]

To cite this document: BenchChem. [The Azepane Scaffold: A Versatile Framework for Modern Drug Discovery]. BenchChem, [2026]. [Online PDF] at: [https://www.benchchem.com/product/b3054010/docs#the-azepane-scaffold-a-versatile-framework-for-modern-drug-discovery]

Disclaimer & Data Validity:

The information provided in this document is for Research Use Only (RUO) and is strictly not intended for diagnostic or therapeutic procedures. While BenchChem strives to provide accurate protocols, we make no warranties, express or implied, regarding the fitness of this product for every specific experimental setup.

Technical Support: The protocols provided are for reference purposes. Unsure if this reagent suits your experiment?

Need Industrial/Bulk Grade? Request Custom Synthesis Quote

BenchChem

Our mission is to be the trusted global source of essential and advanced chemicals, empowering scientists and researchers to drive progress in science and industry.

Contact

Address: 3281 E Guasti Rd

Ontario, CA 91761, United States

Phone: (601) 213-4426

Email: info@benchchem.com

Contact our Ph.D. Support Team for a compatibility check