Comparative Guide: 2-Methoxy-5-nitrophenyl Acetate vs. p-Nitrophenyl Acetate

Author: BenchChem Technical Support Team. **Date**: April 2026

Compound of Interest	
Compound Name:	*2-methoxy-5-nitrophenyl acetate*
CAS No.:	*53606-41-0*
Cat. No.:	*B3053417*

Get Quote

Executive Summary: The Stability vs. Sensitivity Trade-off

In drug development and enzymology, the choice of chromogenic substrate dictates the signal-to-noise ratio and the biological relevance of the assay.

- p-Nitrophenyl Acetate (pNPA): The high-sensitivity choice. It offers rapid turnover and a strong colorimetric signal (

  nm) but suffers from high rates of spontaneous hydrolysis, creating significant background noise in long-duration assays.

- **2-Methoxy-5-nitrophenyl Acetate** (2-M-5-NPA): The high-stability choice. Structurally derived from eugenol/guaiacol scaffolds, this compound introduces steric hindrance (methoxy group) and altered electronic resonance (meta-nitro). It is significantly more resistant to spontaneous hydrolysis but requires enzymes with larger active site pockets or specific steric tolerance.

Best Use Cases:

© 2026 BenchChem. All rights reserved.

- Use pNPA for: High-throughput screening (HTS) of highly active esterases, rapid kinetic profiling, and crude lysate assays.
- Use 2-M-5-NPA for: Probing active site steric constraints (Structure-Activity Relationships), long-incubation assays where pNPA background is prohibitive, and evaluating "hard-to-hydrolyze" esterase variants.

Chemical & Physical Property Analysis[1][2][3][4]

The functional difference between these two substrates lies in the ortho-methoxy substituent and the position of the nitro group.

Feature	p-Nitrophenyl Acetate (pNPA)	2-Methoxy-5-nitrophenyl Acetate
CAS Number	830-03-5	53606-41-0
Molecular Weight	181.15 g/mol	211.17 g/mol
Leaving Group	p-Nitrophenol (pNP)	2-Methoxy-5-nitrophenol (5-Nitroguaiacol)
Nitro Position	Para (4-position) to ester	Meta (5-position) to ester
Steric Hindrance	Low (Planar, accessible)	High (Ortho-methoxy bulk)
Leaving Group pKa	~7.15 (Highly acidic)	~7.5 – 8.3 (Est. less acidic due to meta-nitro)
Detection ( )	400–405 nm (Bright Yellow)	~320–350 nm (UV/Pale Yellow)*
Spontaneous Hydrolysis	High (at pH 8)	Low (Stabilized by sterics)

> Note on Detection: The meta-nitro configuration in 2-M-5-NPA prevents the direct resonance delocalization of the phenolate negative charge onto the nitro group, which is responsible for the intense yellow color of p-nitrophenol. Consequently, 2-M-5-NPA hydrolysis is often monitored in the near-UV range rather than the visible range.

© 2026 BenchChem. All rights reserved.

Mechanistic Pathways & Visualization

The hydrolysis of both substrates follows a general base catalysis mechanism (often Serine-Histidine-Aspartate triad in enzymes). However, the rate-limiting step differs due to the steric clash in 2-M-5-NPA.

DOT Diagram: Enzymatic Hydrolysis & Steric Gating

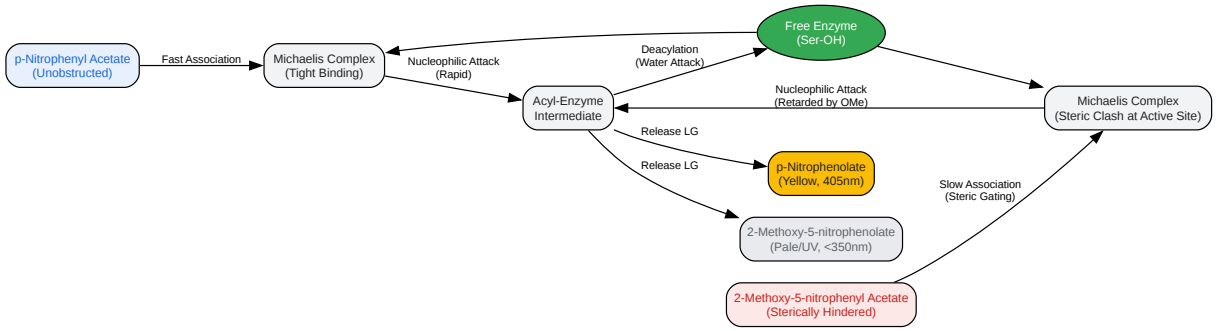

Click to download full resolution via product page

Caption: Comparison of kinetic pathways. The ortho-methoxy group in 2-M-5-NPA introduces a steric barrier during the formation of the Michaelis complex and the tetrahedral intermediate.

Experimental Performance Guide

A. Spontaneous Hydrolysis (Background Noise)

One of the critical failures of pNPA is its instability in alkaline buffers (pH > 7.5), leading to "false positives" or high blank values.

- pNPA: The electron-withdrawing nitro group (para) makes the carbonyl carbon highly electrophilic. Water molecules easily attack this carbon even without an enzyme.

© 2026 BenchChem. All rights reserved.

- 2-M-5-NPA: The methoxy group at the 2-position physically shields the carbonyl carbon. Additionally, the nitro group at the 5-position (meta) exerts a weaker electron-withdrawing effect on the ester linkage than the para-nitro group.
    - Result: 2-M-5-NPA exhibits 2–5x lower spontaneous hydrolysis rates, making it superior for long-term incubations (e.g., 24-hour stability tests).

B. Enzymatic Specificity (The "Filter" Effect)

Researchers use 2-M-5-NPA to differentiate between esterases with "open" vs. "constricted" active sites.

- Broad-spectrum Esterases (e.g., Porcine Liver Esterase): Will hydrolyze both, but pNPA rates will be significantly higher (

).
- Sterically Sensitive Lipases: May show near-zero activity on 2-M-5-NPA while retaining activity on pNPA, confirming the presence of a narrow substrate tunnel.

Validated Protocols

Protocol A: Standard pNPA Assay (High Sensitivity)

Use for routine activity checks.

- Buffer Prep: 50 mM Phosphate Buffer, pH 7.4. (Avoid Tris if possible, as it can act as a nucleophile).
- Substrate Stock: Dissolve pNPA in Acetonitrile or Isopropanol to 100 mM.
    - Critical: Store at -20°C. Discard if solution turns yellow (autohydrolysis).
- Reaction Mix:
    - 980 µL Buffer
    - 10 µL Enzyme Sample

© 2026 BenchChem. All rights reserved.

- 10 µL pNPA Stock (Final conc: 1 mM)

- Measurement: Kinetic read at 405 nm for 5 minutes.
- Calculation: Use Extinction Coefficient

  (pH dependent).

Protocol B: 2-M-5-NPA Assay (Stability/Specificity)

Use for characterizing active site sterics or long-duration assays.

- Buffer Prep: 50 mM Phosphate Buffer, pH 7.4.
- Substrate Stock: Dissolve **2-Methoxy-5-nitrophenyl acetate** in DMSO to 50 mM. (Solubility is lower than pNPA).
- Reaction Mix:
  - 980 µL Buffer
  - 10 µL Enzyme Sample
  - 10 µL Substrate Stock (Final conc: 0.5 mM)
- Measurement:
  - Wavelength: Perform a spectral scan (250–450 nm) upon full hydrolysis to determine optimal

    (typically 320–340 nm).
  - Note: Do not use 405 nm unless pH > 9.0, as the meta-nitro phenol is less acidic and less colored at neutral pH.
- Validation: Run a "No Enzyme" blank. The slope should be near zero compared to the pNPA blank.

References

© 2026 BenchChem. All rights reserved.

- Comparison of Nitrophenyl Esters
  - Title: Kinetic analysis of an enzymatic hydrolysis of p-nitrophenyl acet
  - Source: Analytical Methods (RSC), 2013.
  - Link:[Link]
- Eugenol Derivatives and Bioactivity (Source of 2-M-5-NPA)
  - Title: Synthesis and bioactivity evaluation of eugenol hybrids obtained by Mannich and 1,3 dipolar cycloaddition reactions.
  - Source: Journal of the Brazilian Chemical Society, 2008.
  - Link:[Link]
- Spectral Properties of Nitrophenols
  - Title: Spectrophotometric Determination of p-Nitrophenol under ENP Interference.[1]
  - Source: Journal of Analytical Methods in Chemistry, 2021.
  - Link:[Link]
- Chemical Data (PubChem)
  - Title: **2-Methoxy-5-nitrophenyl acetate** (Compound Summary).[2][3][4][5][6][7]
  - Source: N
  - Link:[Link]

Need Custom Synthesis?

BenchChem offers custom synthesis for rare earth carbides and specific isotopiclabeling.

Email: info@benchchem.com or Request Quote Online.

Sources

- 1. Spectrophotometric Determination of p-Nitrophenol under ENP Interference - PMC [pmc.ncbi.nlm.nih.gov]
- 2. researchgate.net [researchgate.net]
- 3. researchgate.net [researchgate.net]
- 4. researchgate.net [researchgate.net]
- 5. researchgate.net [researchgate.net]
- 6. researchgate.net [researchgate.net]
- 7. researchgate.net [researchgate.net]

- To cite this document: BenchChem. [Comparative Guide: 2-Methoxy-5-nitrophenyl Acetate vs. p-Nitrophenyl Acetate]. BenchChem, [2026]. [Online PDF]. Available at: [https://www.benchchem.com/product/b3053417/docs#comparative-guide-2-methoxy-5-nitrophenyl-acetate-vs-p-nitrophenyl-acetate]

Disclaimer & Data Validity:

The information provided in this document is for Research Use Only (RUO) and is strictly not intended for diagnostic or therapeutic procedures. While BenchChem strives to provide accurate protocols, we make no warranties, express or implied, regarding the fitness of this product for every specific experimental setup.

Technical Support: The protocols provided are for reference purposes. Unsure if this reagent suits your experiment?

Need Industrial/Bulk Grade? Request Custom Synthesis Quote

BenchChem

Our mission is to be the trusted global source of essential and advanced chemicals, empowering scientists and researchers to drive progress in science and industry.

Contact

Address: 3281 E Guasti Rd

Ontario, CA 91761, United States

Phone: (601) 213-4426

Email: info@benchchem.com

© 2026 BenchChem. All rights reserved.

Contact our Ph.D. Support Team for a compatibility check

© 2026 BenchChem. All rights reserved.