Application Notes and Protocols for T-448 in Gene Regulation Studies

Author: BenchChem Technical Support Team. **Date**: April 2026

Compound of Interest

Compound Name:	*T-448*
Cat. No.:	*B3028096*

Get Quote

For Researchers, Scientists, and Drug Development Professionals

Introduction

T-448, also known as EOS-448 or Belrestotug, is a human IgG1 anti-TIGIT (T cell immunoglobulin and ITIM domain) monoclonal antibody. TIGIT is an immune checkpoint receptor expressed on various immune cells, including T cells and Natural Killer (NK) cells. By targeting TIGIT, **T-448** acts as an antagonist, blocking the interaction of TIGIT with its ligands, such as CD155 (PVR) and CD112 (PVRL2). This blockade disrupts the inhibitory signals mediated by TIGIT, leading to the enhanced activation of anti-tumor immune responses. The mechanism of action of **T-448** is multifaceted, involving direct T-cell activation and the depletion of regulatory T cells (Tregs) in an Fc-gamma receptor (FcγR) dependent manner.[1][2][3] These characteristics make **T-448** a valuable tool for studying the role of the TIGIT signaling pathway in gene regulation within the tumor microenvironment and for the development of novel cancer immunotherapies.

Data Presentation

Quantitative Data Summary

© 2026 BenchChem. All rights reserved.

The following tables summarize the available quantitative data for **T-448** (EOS-448/Belrestotug).

Parameter	Value	Method	Source
Binding Affinity (Kd) to human TIGIT protein	6.401 x 10^{-10} M	Bio-Layer Interferometry (BLI)	[4]
Picomolar Activity	Reported	Not Specified	[3]

Table 1: In Vitro Binding Affinity of **T-448**

Treatment Arm	Dose	Objective Response Rate (ORR)	Confirmed ORR (cORR)
Belrestotug + Dostarlimab	100 mg	63.3%	60.0%
Belrestotug + Dostarlimab	400 mg	65.6%	59.4%
Belrestotug + Dostarlimab	1000 mg	76.7%	63.3%
Dostarlimab Monotherapy	Not Applicable	37.5%	28.1%

Table 2: Clinical Efficacy of Belrestotug in Combination with Dostarlimab in First-Line, PD-L1 High Non-Small Cell Lung Cancer (NSCLC) Patients (GALAXIES Lung-201 Study).[5][6][7]

Dose of Belrestotug in Combination	Median ctDNA Change from Baseline
100 mg	-55%
400 mg	-94%
1000 mg	-97%
Dostarlimab Monotherapy	-65%

© 2026 BenchChem. All rights reserved.

Table 3: Change in Circulating Tumor DNA (ctDNA) in NSCLC Patients Treated with Belrestotug and Dostarlimab.[6]

Experimental Protocols

Protocol 1: In Vitro T-Cell Activation Assay

This protocol is designed to assess the effect of **T-448** on T-cell activation by measuring the expression of activation markers using flow cytometry.

Materials:

- Peripheral Blood Mononuclear Cells (PBMCs)
- **T-448** (EOS-448)
- Isotype control antibody
- Anti-CD3 antibody
- Anti-CD28 antibody
- RPMI-1640 medium supplemented with 10% FBS, penicillin/streptomycin
- Flow cytometry staining buffer (e.g., PBS with 2% FBS)
- Fluorochrome-conjugated antibodies against CD3, CD4, CD8, and T-cell activation markers (e.g., CD69, CD25, Ki67)
- 96-well cell culture plates
- Flow cytometer

Procedure:

- Isolate PBMCs from healthy donor blood using Ficoll-Paque density gradient centrifugation.
- Resuspend PBMCs in complete RPMI-1640 medium at a concentration of 1 x 10^6 cells/mL.

© 2026 BenchChem. All rights reserved.

- Seed 1 x 10^5 cells per well in a 96-well plate.
- Prepare serial dilutions of **T-448** and the isotype control antibody in complete medium.
- Add the antibody dilutions to the respective wells.
- For T-cell stimulation, add anti-CD3 (e.g., 1 µg/mL) and anti-CD28 (e.g., 1 µg/mL) antibodies to the appropriate wells. Include unstimulated control wells.
- Incubate the plate at 37°C in a humidified 5% CO_2 incubator for 48-72 hours.
- Harvest the cells and wash them with flow cytometry staining buffer.
- Stain the cells with a cocktail of fluorochrome-conjugated antibodies against surface markers (CD3, CD4, CD8) and activation markers (CD69, CD25) for 30 minutes at 4°C in the dark.
- For intracellular staining of markers like Ki67, fix and permeabilize the cells according to the manufacturer's protocol before adding the intracellular antibody.
- Wash the cells and resuspend them in staining buffer.
- Acquire the samples on a flow cytometer and analyze the data to determine the percentage of activated T cells in each condition.

Protocol 2: Regulatory T-cell (Treg) Depletion Assay

This protocol assesses the ability of **T-448** to deplete Treg populations within PBMCs through antibody-dependent cell-mediated cytotoxicity (ADCC).

Materials:

- PBMCs
- **T-448** (EOS-448)
- Isotype control antibody
- RPMI-1640 medium supplemented with 10% FBS, penicillin/streptomycin

© 2026 BenchChem. All rights reserved.

- Flow cytometry staining buffer
- Fluorochrome-conjugated antibodies against CD3, CD4, CD25, and Foxp3
- Fixation/Permeabilization buffer for Foxp3 staining
- 96-well cell culture plates
- Flow cytometer

Procedure:

- Isolate PBMCs as described in Protocol 1.
- Resuspend PBMCs in complete RPMI-1640 medium at a concentration of 2 x 10^6 cells/mL.
- Seed 2 x 10^5 cells per well in a 96-well plate.
- Prepare serial dilutions of **T-448** and the isotype control antibody in complete medium.
- Add the antibody dilutions to the respective wells.
- Incubate the plate at 37°C in a humidified 5% CO_2 incubator for 24-48 hours.
- Harvest the cells and wash them with flow cytometry staining buffer.
- Stain for surface markers (CD3, CD4, CD25) for 30 minutes at 4°C.
- Fix and permeabilize the cells using a Foxp3 staining buffer set according to the manufacturer's instructions.
- Stain for intracellular Foxp3 for 30-45 minutes at room temperature.
- Wash the cells and resuspend them in staining buffer.
- Acquire the samples on a flow cytometer and analyze the data to determine the percentage of Tregs ($CD4^+CD25^+Foxp3^+$) in each condition.

© 2026 BenchChem. All rights reserved.

Protocol 3: Gene Expression Analysis by RT-qPCR

This protocol outlines the steps to analyze the expression of specific genes involved in T-cell function and regulation following treatment with **T-448**.

Materials:

- PBMCs
- **T-448** (EOS-448)
- Isotype control antibody
- T-cell stimulation reagents (e.g., anti-CD3/CD28)
- RNA extraction kit
- cDNA synthesis kit
- qPCR master mix
- Primers for target genes (e.g., IFNG, TNF, IL2, FOXP3, TBX21) and a housekeeping gene (e.g., GAPDH, ACTB)
- 6-well cell culture plates
- Real-time PCR instrument

Procedure:

- Seed 1-2 x 10^6 PBMCs per well in a 6-well plate in complete RPMI-1640 medium.
- Treat the cells with **T-448** or an isotype control at the desired concentration.
- Stimulate the T cells with anti-CD3/CD28 antibodies.
- Incubate for 24-48 hours at 37°C and 5% CO_2.
- Harvest the cells and extract total RNA using a commercial RNA extraction kit.

© 2026 BenchChem. All rights reserved.

- Assess RNA quality and quantity using a spectrophotometer or a bioanalyzer.
- Synthesize cDNA from the extracted RNA using a reverse transcription kit.
- Perform real-time quantitative PCR (RT-qPCR) using a qPCR master mix, cDNA template, and specific primers for the target and housekeeping genes.
- Analyze the qPCR data using the ΔΔCt method to determine the relative fold change in gene expression in **T-448** treated samples compared to the control.

Mandatory Visualizations

© 2026 BenchChem. All rights reserved.

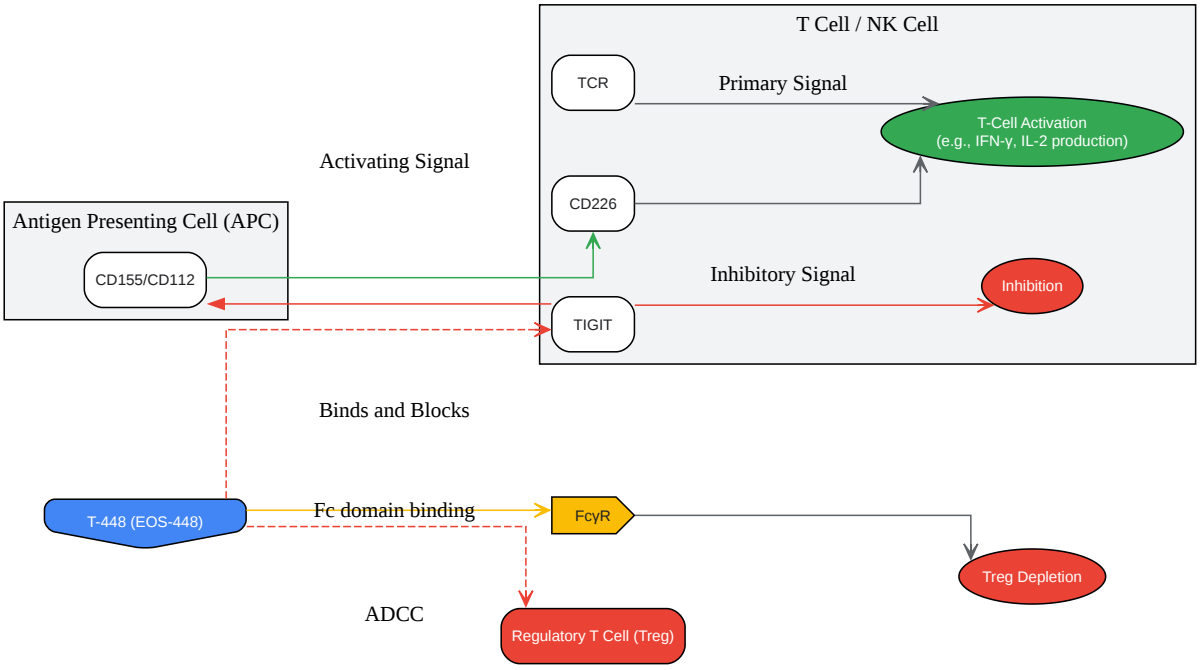

© 2026 BenchChem. All rights reserved.

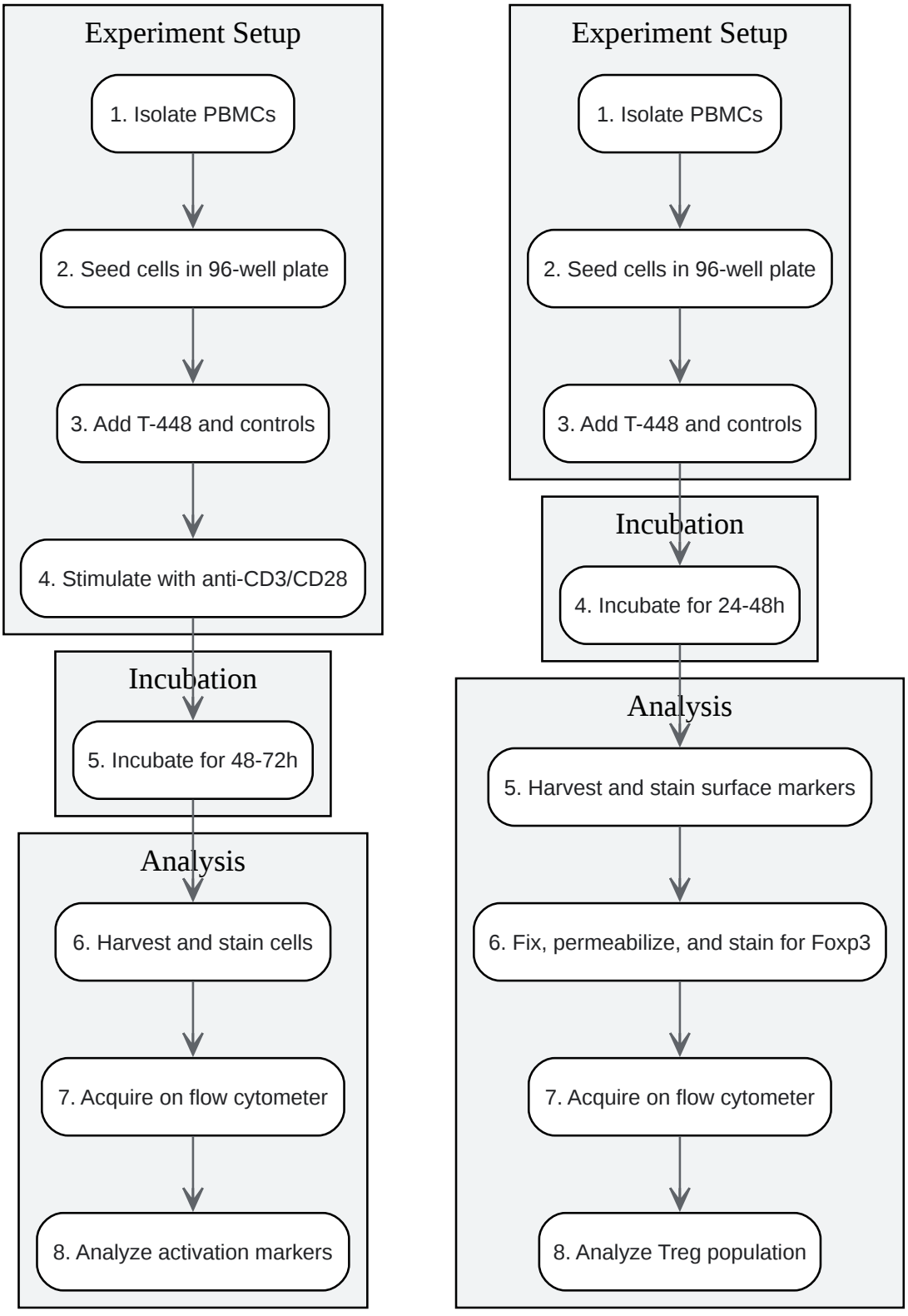

Click to download full resolution via product page

© 2026 BenchChem. All rights reserved.

Need Custom Synthesis?

BenchChem offers custom synthesis for rare earth carbides and specific isotopiclabeling.

Email: info@benchchem.com or Request Quote Online.

References

- 1. gsk.com [gsk.com]
- 2. firstwordpharma.com [firstwordpharma.com]
- 3. researchgate.net [researchgate.net]
- 4. medchemexpress.com [medchemexpress.com]
- 5. targetedonc.com [targetedonc.com]
- 6. Another TIGIT bites the dust | ApexOnco - Clinical Trials news and analysis [oncologypipeline.com]
- 7. firstwordpharma.com [firstwordpharma.com]
- To cite this document: BenchChem. [Application Notes and Protocols for T-448 in Gene Regulation Studies]. BenchChem, [2026]. [Online PDF]. Available at: [https://www.benchchem.com/product/b3028096/docs#application-notes-and-protocols-for-t-448-in-gene-regulation-studies]

Disclaimer & Data Validity:

The information provided in this document is for Research Use Only (RUO) and is strictly not intended for diagnostic or therapeutic procedures. While BenchChem strives to provide accurate protocols, we make no warranties, express or implied, regarding the fitness of this product for every specific experimental setup.

Technical Support: The protocols provided are for reference purposes. Unsure if this reagent suits your experiment?

Need Industrial/Bulk Grade? Request Custom Synthesis Quote

BenchChem

Our mission is to be the trusted global source of essential and advanced chemicals, empowering scientists and researchers to drive progress in science and industry.

Contact

Address: 3281 E Guasti Rd

Ontario, CA 91761, United States

Phone: (601) 213-4426

Email: info@benchchem.com

Contact our Ph.D. Support Team for a compatibility check

© 2026 BenchChem. All rights reserved.