Application Note: High-Sensitivity LC-MS/MS Analysis of Imidazole Carboxylic Acids

Author: BenchChem Technical Support Team. **Date**: April 2026

Compound of Interest

Compound Name:	*1-(4-Bromobenzyl)-1H-imidazole-2-carboxylic acid*
CAS No.:	*1439899-09-8*
Cat. No.:	*B3027945*

Get Quote

Method Development Guide for Polar Zwitterionic Metabolites

Executive Summary & Core Challenge

Imidazole carboxylic acids (e.g., Imidazole-4-carboxylic acid, Imidazole-4,5-dicarboxylic acid) represent a distinct analytical challenge due to their amphoteric nature and high polarity. These small molecules contain both a basic imidazole ring (pKa ~6.0–7.0) and acidic carboxylic moieties (pKa ~2.0–4.0), resulting in a zwitterionic state at neutral pH.

The "Polarity Trap": Conventional Reverse-Phase (C18) chromatography fails for these analytes because:

- Lack of Retention: They elute in the void volume (

) where ion suppression is highest.
- Secondary Interactions: Residual silanols on silica columns interact with the basic imidazole nitrogen, causing severe peak tailing.

© 2026 BenchChem. All rights reserved.

- pH Sensitivity: Slight pH shifts dramatically alter the net charge, affecting reproducibility.

This guide details a Hydrophilic Interaction Liquid Chromatography (HILIC) approach as the primary protocol, with Mixed-Mode Chromatography as a robust alternative, ensuring retention, sensitivity, and MS-compatibility without the use of persistent ion-pairing reagents.

Method Development Strategy: The "Why" and "How"

Column Selection: HILIC vs. Mixed-Mode

We prioritize Zwitterionic HILIC (ZIC-HILIC) stationary phases. Unlike bare silica, ZIC-HILIC phases (containing sulfobetaine or phosphorylcholine groups) provide a permanent water-rich layer on the surface while allowing weak electrostatic interactions. This "partitioning + electrostatic" mechanism is ideal for separating imidazole acids from interfering matrix components.

Mobile Phase Chemistry

- Buffer Selection: Ammonium Acetate (10–20 mM) is critical. It provides the necessary ionic strength to disrupt secondary ionic interactions and maintains a stable pH.
- pH Optimization:
  - Target pH 5.8 – 6.5: At this pH, the carboxylic acid is deprotonated (

) and the imidazole ring is partially protonated. This enhances the hydrophilic interaction with the HILIC water layer.
  - Avoid pH < 3: The molecule becomes fully cationic, potentially leading to repulsion from positively charged HILIC phases (depending on the specific column chemistry).

Mass Spectrometry Detection[1]

- Ionization: Electrospray Ionization (ESI) in Positive Mode is generally more sensitive for imidazoles due to the high proton affinity of the nitrogen ring.

© 2026 BenchChem. All rights reserved.

- Desolvation: HILIC mobile phases (high ACN) desolvate more efficiently than aqueous RP phases, often yielding a 5–10x gain in sensitivity.

Visualization: Method Development Workflow

The following decision tree outlines the logical flow for optimizing the separation of imidazole derivatives.

© 2026 BenchChem. All rights reserved.

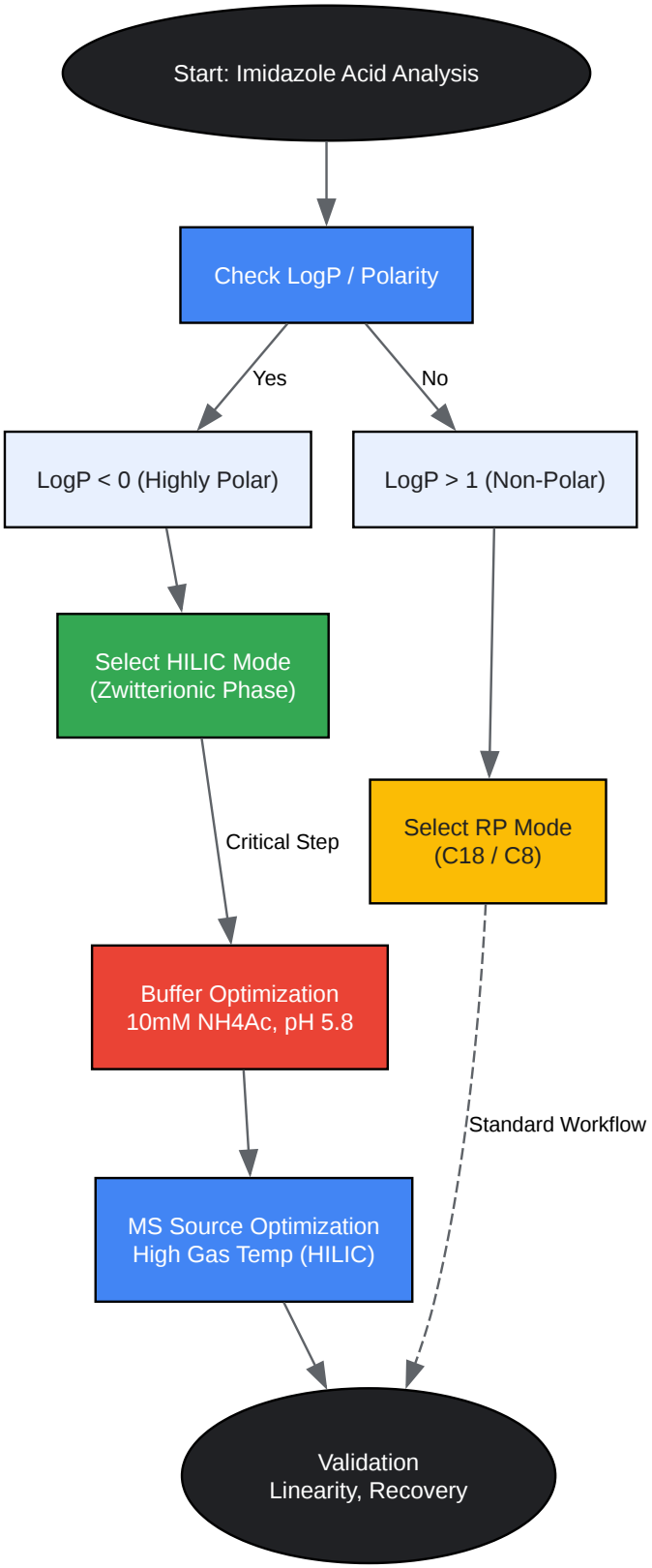

Click to download full resolution via product page

© 2026 BenchChem. All rights reserved.

Figure 1: Decision matrix for selecting the chromatographic mode based on analyte polarity. HILIC is the designated path for imidazole carboxylic acids.

Detailed Experimental Protocol

Chemicals & Reagents

- Standards: Imidazole-4-carboxylic acid (ICA), Imidazole-4,5-dicarboxylic acid (IDCA).
- Internal Standard (IS): Urocanic acid-d4 or Histidine-15N3 (structural analogs).
- Solvents: LC-MS grade Acetonitrile (ACN), Water, Ammonium Acetate, Formic Acid.

Sample Preparation (Protein Precipitation)

Direct injection of urine or plasma is possible after simple cleanup due to the high retention of polar analytes in HILIC (matrix elutes early or late).

- Aliquoting: Transfer 50 µL of plasma/urine to a 1.5 mL centrifuge tube.
- Spiking: Add 10 µL of Internal Standard solution (1 µg/mL in 50:50 ACN:Water).
- Precipitation: Add 200 µL of ice-cold Acetonitrile (containing 0.1% Formic Acid).
  - Note: The high organic content matches the initial HILIC mobile phase conditions.
- Vortex & Centrifuge: Vortex for 30s; Centrifuge at 14,000 x g for 10 min at 4°C.
- Transfer: Transfer supernatant to an HPLC vial. Do not evaporate and reconstitute in water, as this will cause peak broadening upon injection into a HILIC column.

LC Conditions (HILIC)

© 2026 BenchChem. All rights reserved.

Parameter	Setting
System	UHPLC (e.g., Agilent 1290, Waters Acquity)
Column	ZIC-HILIC (Merck/SeQuant) or Acquity BEH Amide (Waters) Dimensions: 2.1 x 100 mm, 1.7 µm or 3.5 µm
Mobile Phase A	10 mM Ammonium Acetate in Water, pH 5.8 (adjusted w/ Acetic Acid)
Mobile Phase B	Acetonitrile (100%)
Flow Rate	0.4 mL/min
Column Temp	40°C
Injection Vol	2–5 µL (Must be in high organic solvent)

Gradient Table:

Time (min)	%B (Organic)	Description
0.0	90	Initial high organic for retention
1.0	90	Isocratic hold to stabilize baseline
6.0	50	Linear ramp to elute polar analytes
7.0	50	Hold to flush matrix
7.1	90	Return to initial conditions
10.0	90	Re-equilibration (Critical for HILIC)

MS/MS Parameters (Source & MRM)

Source Settings (ESI+):

© 2026 BenchChem. All rights reserved.

- Gas Temperature: 325°C (Higher temp aids desolvation of aqueous buffers)
- Gas Flow: 10 L/min
- Nebulizer: 35 psi
- Capillary Voltage: 3500 V

MRM Transitions: Note: Optimize Collision Energy (CE) for your specific instrument.

Analyte	Precursor Ion (m/z)	Product Ion (m/z)	Loss ID	CE (eV)
Imidazole-4-carboxylic acid	113.1 [M+H]+	69.1	-CO2 (44 Da)	15
95.1	-H2O (18 Da)	10		
Imidazole-4,5-dicarboxylic acid	157.1 [M+H]+	113.1	-CO2 (44 Da)	12
139.1	-H2O (18 Da)	10		
1-Methyl-4-imidazoleacetic acid	141.1 [M+H]+	95.1	-CH2COOH	18

Mechanism of Separation (Graphviz)

Understanding the HILIC mechanism ensures better troubleshooting. The analyte partitions into the water-rich layer adsorbed on the zwitterionic surface.

© 2026 BenchChem. All rights reserved.

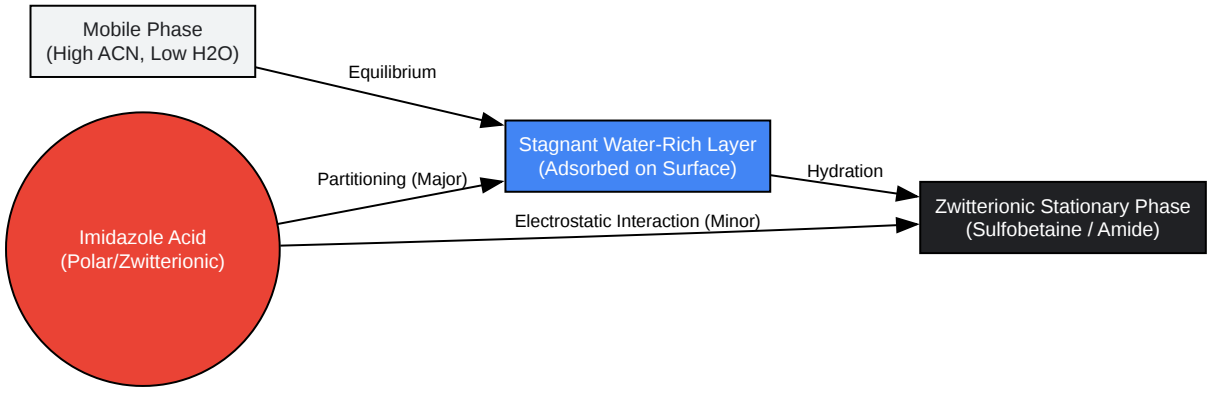

Click to download full resolution via product page

Figure 2: HILIC retention mechanism. Retention is driven by partitioning into the water layer and electrostatic modulation.

Troubleshooting & Optimization

Peak Tailing

- Cause: Secondary interactions between the imidazole nitrogen and free silanols, or metal chelation by the carboxylic acid.
- Solution: Increase Ammonium Acetate concentration to 20 mM. If using a steel column body, consider a PEEK-lined column to reduce metal interaction.

Retention Time Shifting

- Cause: HILIC columns require long equilibration times.
- Solution: Ensure at least 15–20 column volumes of re-equilibration between runs. Maintain precise pH control of Mobile Phase A.

Sensitivity Loss

- Cause: Ion suppression from salts eluting early (in RP) or late (in HILIC).

© 2026 BenchChem. All rights reserved.

- Solution: Divert the LC flow to waste for the first 1.0 min. Ensure the sample diluent is >80% ACN to prevent "solvent mismatch" effects which ruin peak shape.

References

- Teav, T. et al. (2021).[1] Hydrophilic Interaction Liquid Chromatography–Mass Spectrometry (HILIC–MS) Approaches for Probing the Polar Metabolome. Royal Society of Chemistry.[1]
- Cahours, X. et al. (2014). A Quantitative LC/MS Method Targeting Urinary 1-methyl-4-imidazoleacetic Acid for Safety Monitoring. Analytical and Bioanalytical Chemistry.
- SIELC Technologies. (2023). HILIC Separation of Carboxylic Acids using Obelisc N.
- Waters Corporation. (2020). Ion-Pairing Selection and Mixer Considerations in LC-MS Workflows.
- PubChem. (2023).[2][3] Imidazole-4-carboxylic acid: Chemical and Physical Properties. National Library of Medicine.

Need Custom Synthesis?

BenchChem offers custom synthesis for rare earth carbides and specific isotopiclabeling.

Email: info@benchchem.com or Request Quote Online.

Sources

- 1. books.rsc.org [books.rsc.org]
- 2. 1H-Imidazole-4,5-dicarboxylic acid | C5H4N2O4 | CID 68442 - PubChem [pubchem.ncbi.nlm.nih.gov]
- 3. Imidazole-4-carboxylic acid | C4H4N2O2 | CID 14080 - PubChem [pubchem.ncbi.nlm.nih.gov]
- To cite this document: BenchChem. [Application Note: High-Sensitivity LC-MS/MS Analysis of Imidazole Carboxylic Acids]. BenchChem, [2026]. [Online PDF]. Available at: [https://www.benchchem.com/product/b3027945/docs#application-note-high-sensitivity-lc-ms-ms-analysis-of-imidazole-carboxylic-acids]

Disclaimer & Data Validity:

The information provided in this document is for Research Use Only (RUO) and is strictly not intended for diagnostic or therapeutic procedures. While BenchChem strives to provide accurate protocols, we make no warranties, express or implied, regarding the fitness of this product for every specific experimental setup.

Technical Support: The protocols provided are for reference purposes. Unsure if this reagent suits your experiment?

Need Industrial/Bulk Grade? Request Custom Synthesis Quote

BenchChem

Our mission is to be the trusted global source of essential and advanced chemicals, empowering scientists and researchers to drive progress in science and industry.

Contact

Address: 3281 E Guasti Rd

Ontario, CA 91761, United States

Phone: (601) 213-4426

Email: info@benchchem.com

Contact our Ph.D. Support Team for a compatibility check

© 2026 BenchChem. All rights reserved.