Technical Guide: Mass Spectrometry Analysis of Homoselenocysteine (hSec) Peptides

Author: BenchChem Technical Support Team. **Date**: May 2026

Compound of Interest

Compound Name:	*Boc-HomoSec(pMeBzl)-OH*
CAS No.:	*2044709-66-0*
Cat. No.:	*B3021773*

Get Quote

Executive Summary

Homoselenocysteine (hSec) has emerged as a critical tool in chemical protein synthesis, primarily due to its utility in native chemical ligation (NCL) and subsequent deselenization to mimic Alanine or conversion to other functionalities.[1] However, hSec presents unique analytical challenges compared to its sulfur analog (Homocysteine) or its lower homolog (Selenocysteine).

This guide provides a technical comparison of hSec analysis against standard alternatives, detailing the specific mass spectrometry (MS) behaviors—isotopic envelopes, fragmentation channels, and oxidation states—that researchers must master to validate synthetic outcomes.

Part 1: The Selenium Signature – Identification Fundamentals

The primary differentiator of hSec peptides is the selenium atom. Unlike sulfur (Cys/Hcy) or carbon-based analogs, selenium possesses a distinct isotopic distribution that serves as a built-in "barcode" for MS1 identification.

© 2026 BenchChem. All rights reserved.

Isotopic Envelope Comparison

The presence of selenium expands the mass envelope significantly. While Sulfur-34 provides a minor peak (~4.2%), Selenium has six stable isotopes, creating a wide, unmistakable distribution.

Feature	Sulfur (Cys / Hcy)	Selenium (Sec / hSec)	Analytical Impact
Dominant Isotope	(95.02%)	(49.6%)	Se peptides show a "split" intensity across and .
Secondary Isotopes	(4.21%)	(23.7%), (9.3%), (8.7%)	Critical: The Se envelope is ~5 Da wide, requiring wider precursor isolation windows in MS/MS.
Mass Defect	Negative (relative to H)	Significant negative defect	Se-peptides appear at slightly lower m/z than calculated if using average mass.

Part 2: Fragmentation Dynamics (hSec vs. Alternatives)

The choice of dissociation method is binary: CID/HCD for peptide sequencing (with caveats) and ETD/ECD for side-chain preservation.

1. Collision-Induced Dissociation (CID/HCD)[2]

- Behavior: The C-Se bond is weaker than the C-S bond. Under vibrational excitation (CID), hSec peptides frequently undergo neutral loss of H_2Se (81 Da) or the radical loss of Se (80 Da) before backbone fragmentation occurs.
- Result: Spectra are dominated by "satellite" peaks corresponding to

© 2026 BenchChem. All rights reserved.

, often suppressing the

and

ion series needed for sequencing.

- Comparison:
  - Cys/Hcy: Stable side chains; standard

    ions observed.
  - hSec: High abundance of neutral loss; sequencing is difficult without high signal-to-noise.

2. Electron Transfer Dissociation (ETD)[2][3][4][5]

- Behavior: ETD cleaves the N-C

  bond (backbone) via radical chemistry, largely preserving the side chain.
- Result: Yields

  and

  ions with the hSec intact. This is the Gold Standard for verifying the position of hSec in a sequence.

Diagram: Fragmentation Pathways

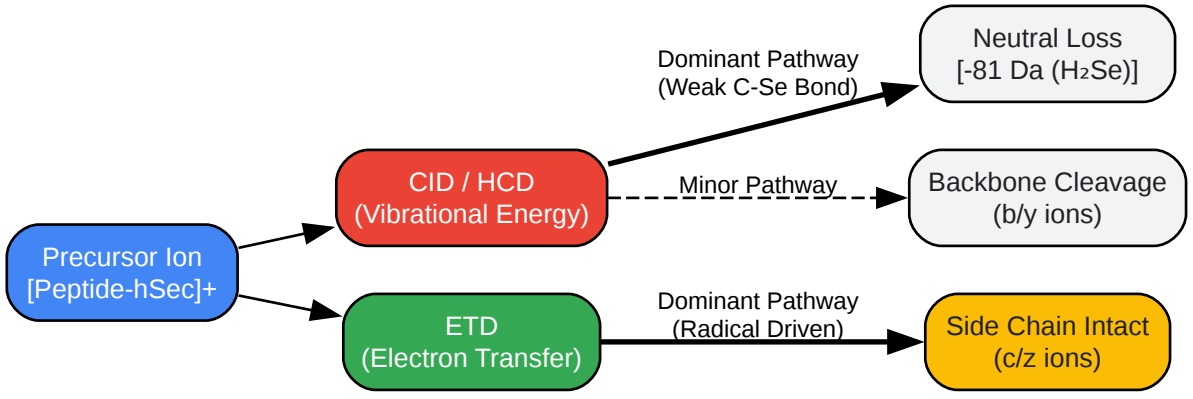

Click to download full resolution via product page

Caption: Comparative fragmentation logic. CID preferentially ejects the Selenium atom, while ETD preserves the modification for localization.

Part 3: Sample Preparation & Stability (The "Trustworthiness" Pillar)

The most common failure mode in hSec analysis is oxidation. Free selenols (-SeH) oxidize to diselenides (Se-Se) or seleninic acids much faster than thiols.

The "Redox" Protocol

To ensure data integrity, you must fix the oxidation state.

- Reduction: Use TCEP (Tris(2-carboxyethyl)phosphine) rather than DTT. TCEP is stable at lower pH, which protects hSec.
- Alkylation (The Critical Differentiator):
  - Challenge: Differentiating hSec from Cys.
  - Solution:pH-Controlled Alkylation.
  - The pKa of the Selenol group in hSec is ~5.2, while the Thiol in Cys is ~8.5.
  - Protocol: Perform alkylation with Iodoacetamide (IAM) at pH 5.5. Only the hSec will be ionized and reactive. Cys remains protonated and unreactive.

Part 4: Step-by-Step Experimental Protocol

This self-validating workflow ensures the peptide detected is truly hSec and not an artifact.

Materials

- Reducing Agent: 20 mM TCEP-HCl.
- Alkylating Agent: 40 mM Iodoacetamide (IAM) or Methyl Iodide (MeI).
- Buffer: 100 mM Ammonium Acetate (pH 5.5 for selective labeling; pH 8.0 for global labeling).

© 2026 BenchChem. All rights reserved.

- LC-MS: C18 Reverse Phase column; High-Resolution MS (Orbitrap or Q-TOF recommended).

Workflow Diagram

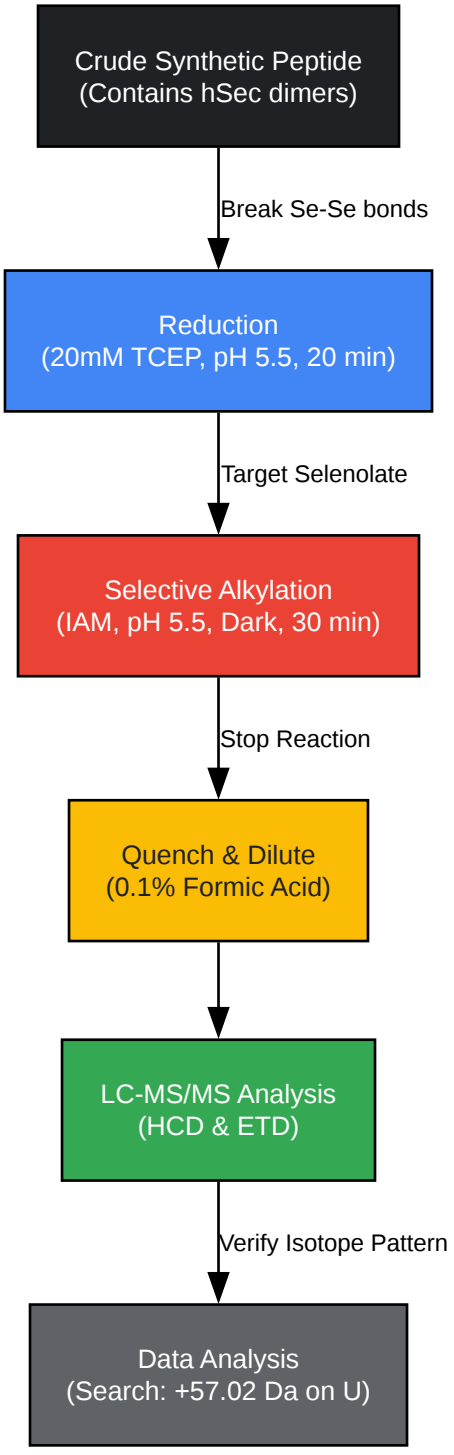

Click to download full resolution via product page

© 2026 BenchChem. All rights reserved.

Caption: Optimized workflow for hSec analysis. Low pH alkylation is the critical control point for specificity.

Protocol Steps

- Solubilization: Dissolve peptide in pH 5.5 buffer. Avoid basic pH to prevent rapid dimerization.
- Reduction: Add TCEP to final 5 mM. Incubate at RT for 20 mins. Why? Ensures all hSec is monomeric (-SeH).
- Selective Alkylation: Add IAM to final 10 mM. Incubate 30 mins in dark at RT.
  - Validation Check: If the mass shift is +57.02 Da (Carbamidomethyl), the reaction worked. If analyzing deselenized product (Ala), look for -64 Da shift relative to hSec.
- LC-MS Injection: Inject immediately. Use a gradient of 5-60% Acetonitrile with 0.1% Formic Acid.
- MS Settings:
  - MS1 Resolution: >60,000 (to resolve isotopic envelope).
  - MS2: Use HCD (Normalized Collision Energy 25-30%) for backbone, but enable "Isotope Triggered" data acquisition if possible to confirm Se presence.

Part 5: Data Analysis & Bioinformatics

When searching your data (Mascot, Sequest, MaxQuant), standard parameters will fail.

- Custom Modification: You must define hSec manually if not in the database.
  - Formula:

    (Residue mass: ~167.0 Da).
  - Alkylated Mass: Add the mass of your alkyl group (e.g., +57.0215 Da for IAM).
- Diagnostic Ions:

© 2026 BenchChem. All rights reserved.

- Look for the Se Immonium Ion in the low mass region (often m/z 160-170 range depending on alkylation).
- Look for the "Doublet" peaks in MS1 separated by 2 Da (

).

References

- Metanis, N., & Hilvert, D. (2014). Chemical Synthesis of Selenoproteins. Current Protocols in Protein Science. Link
- Dardashti, R. N., & Metanis, N. (2017).[6] Revisiting ligation at selenomethionine: Insights into native chemical ligation at selenocysteine and homoselenocysteine. Bioorganic & Medicinal Chemistry.[6] Link
- Guttman, M., et al. (2012). Electron Transfer Dissociation for the Analysis of Selenocysteine-Containing Peptides. Journal of The American Society for Mass Spectrometry. Link
- Hansen, J., & Winther, J. R. (2009).[7] Modification of Cysteine Residues with Alkylating Agents Used in Proteomics.[8][9] Analytical Chemistry.[10][11][12][13] Link

Need Custom Synthesis?

BenchChem offers custom synthesis for rare earth carbides and specific isotopiclabeling.

Email: info@benchchem.com or Request Quote Online.

Sources

- 1. Utilizing Selenocysteine for Expressed Protein Ligation and Bioconjugations - PMC [pmc.ncbi.nlm.nih.gov]
- 2. walshmedicalmedia.com [walshmedicalmedia.com]
- 3. researchgate.net [researchgate.net]
- 4. The Generating Function of CID, ETD, and CID/ETD Pairs of Tandem Mass Spectra: Applications to Database Search - PMC [pmc.ncbi.nlm.nih.gov]
- 5. glenjackson.faculty.wvu.edu [glenjackson.faculty.wvu.edu]

- 6. Revisiting ligation at selenomethionine: Insights into native chemical ligation at selenocysteine and homoselenocysteine - PubMed [pubmed.ncbi.nlm.nih.gov]
- 7. Applying selenocysteine-mediated expressed protein ligation to prepare the membrane enzyme selenoprotein S - PMC [pmc.ncbi.nlm.nih.gov]
- 8. researchgate.net [researchgate.net]
- 9. Protein Alkylation: Exploring Techniques and Applications - Creative Proteomics [creative-proteomics.com]
- 10. youtube.com [youtube.com]
- 11. scielo.br [scielo.br]
- 12. Simultaneous determination of plasma total homocysteine and methionine by liquid chromatography-tandem mass spectrometry - PubMed [pubmed.ncbi.nlm.nih.gov]
- 13. chromatographyonline.com [chromatographyonline.com]

- To cite this document: BenchChem. [Technical Guide: Mass Spectrometry Analysis of Homoselenocysteine (hSec) Peptides]. BenchChem, [2026]. [Online PDF]. Available at: [https://www.benchchem.com/product/b3021773/docs#technical-guide-mass-spectrometry-analysis-of-homoselenocysteine-hsec-peptides]

Disclaimer & Data Validity:

The information provided in this document is for Research Use Only (RUO) and is strictly not intended for diagnostic or therapeutic procedures. While BenchChem strives to provide accurate protocols, we make no warranties, express or implied, regarding the fitness of this product for every specific experimental setup.

Technical Support: The protocols provided are for reference purposes. Unsure if this reagent suits your experiment?

Need Industrial/Bulk Grade? Request Custom Synthesis Quote

© 2026 BenchChem. All rights reserved.

BenchChem

Our mission is to be the trusted global source of essential and advanced chemicals, empowering scientists and researchers to drive progress in science and industry.

Contact

Address: 3281 E Guasti Rd

Ontario, CA 91761, United States

Phone: (601) 213-4426

Email: info@benchchem.com

Contact our Ph.D. Support Team for a compatibility check

© 2026 BenchChem. All rights reserved.