# Application Notes and Protocols for GoSlo-SR-5-69: Calcium Concentration Considerations

**Author**: BenchChem Technical Support Team. **Date**: April 2026

| *Compound of Interest* | |
|---|---|
| *Compound Name:* | *GoSlo-SR-5-69* |
| *CAS No.:* | *1363419-31-1* |
| *Cat. No.:* | *B2989940* |

Get Quote

For Researchers, Scientists, and Drug Development Professionals

## Introduction

**GoSlo-SR-5-69** is a potent and efficacious activator of the large-conductance Ca2+-activated K+ (BK) channels, also known as KCa1.1 or Maxi-K channels.[1] These channels are ubiquitously expressed and play crucial roles in regulating neuronal excitability, smooth muscle tone, and neurotransmitter release by coupling intracellular calcium levels and membrane potential to a hyperpolarizing potassium efflux.[2][3][4] **GoSlo-SR-5-69** exerts its effect by shifting the voltage required for half-maximal channel activation (V1/2) to more negative potentials, thereby increasing the channel's open probability at physiological membrane potentials.[1]

A critical factor influencing the activity of both BK channels and **GoSlo-SR-5-69** is the intracellular calcium concentration ([Ca2+]i). Understanding the interplay between **GoSlo-SR-5-69** and [Ca2+]i is paramount for designing and interpreting experiments, as well as for developing therapeutic agents targeting BK channels. These application notes provide detailed

© 2026 BenchChem. All rights reserved.

protocols and data to guide researchers in utilizing **GoSlo-SR-5-69** effectively, with a specific focus on calcium concentration considerations.

# Data Presentation

The potency of **GoSlo-SR-5-69** is influenced by the intracellular calcium concentration. The following tables summarize the quantitative data on the effects of **GoSlo-SR-5-69** and calcium on BK channel activity.

| Parameter | Value | Reference |
|---|---|---|
| EC50 of GoSlo-SR-5-69 | 251 nM | [1][5] |
| ΔV1/2 with 1 µM GoSlo-SR-5-69 | -113 ± 10 mV | [6][7] |
| ΔV1/2 with 10 µM GoSlo-SR-5-6 | > -100 mV | |
| Solubility | Soluble to 100 mM in DMSO | |
| Storage | Store at room temperature | |

Table 2: Effect of Calcium Concentration on BK Channel Activation

| [Ca2+]i | V1/2 (Control) | ΔV1/2 (Control) | Reference |
|---|---|---|---|
| 100 nM | 142 ± 4 mV | [6][7] | |
| 1 µM | 13 ± 3 mV | -129 ± 5 mV | [6][7] |

# Signaling Pathways and Experimental Workflow

## BK Channel Activation Signaling Pathway

The following diagram illustrates the mechanism of BK channel activation. Intracellular calcium ([Ca2+]i) and membrane depolarization act as primary gating signals. **GoSlo-SR-5-69** acts as a positive allosteric modulator, sensitizing the channel to these signals and promoting the open state, which leads to potassium efflux and membrane hyperpolarization.

© 2026 BenchChem. All rights reserved.

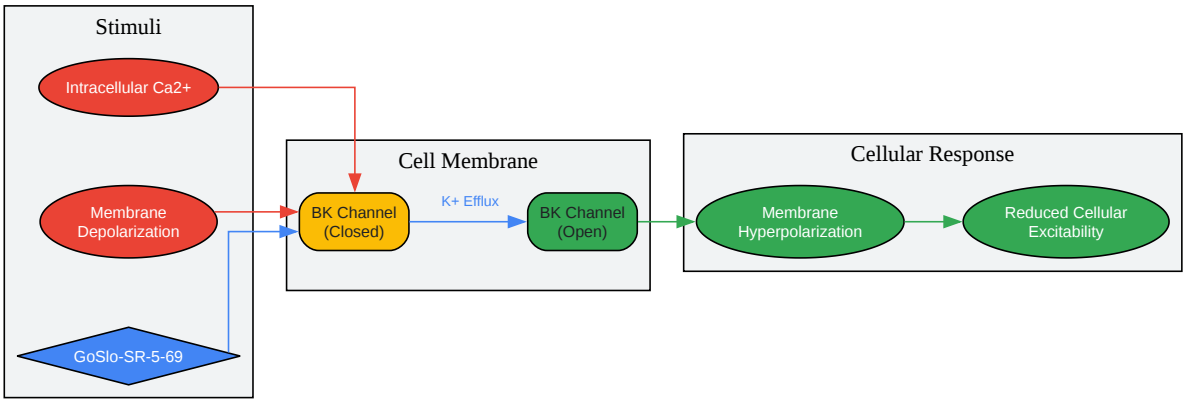


Click to download full resolution via product page

Caption: BK Channel Activation Pathway.

## Experimental Workflow for Patch-Clamp Electrophysiology

This workflow outlines the key steps for investigating the effect of **GoSlo-SR-5-69** on BK channels at varying calcium concentrations using the excised inside-out patch-clamp technique.

© 2026 BenchChem. All rights reserved.

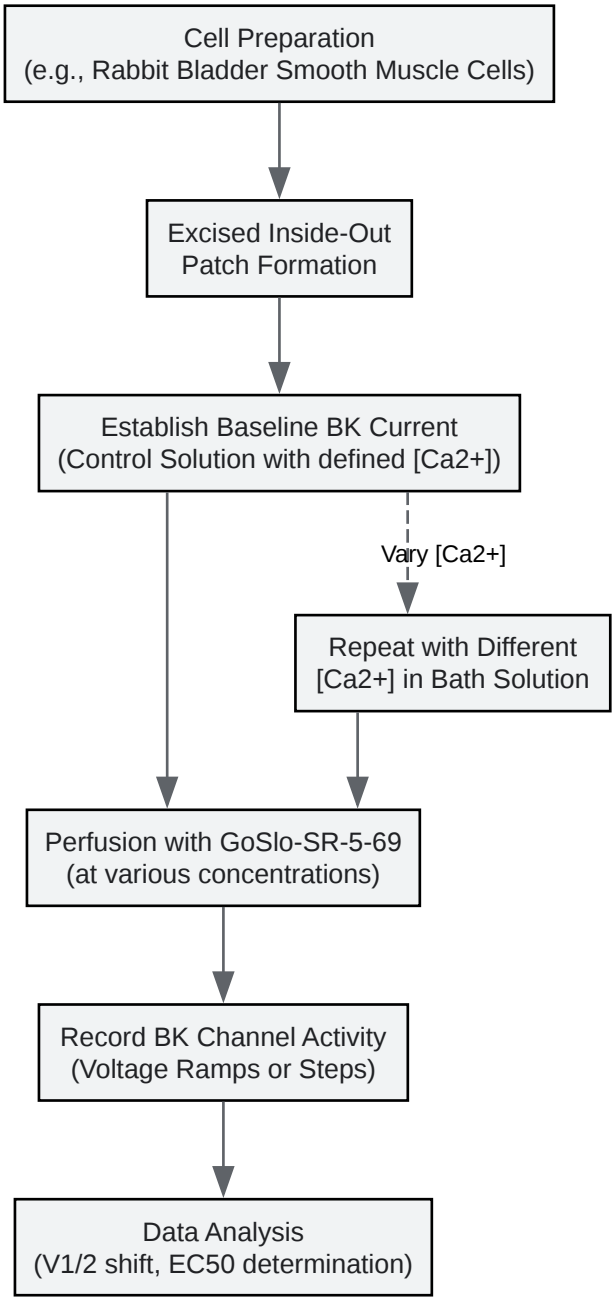


Click to download full resolution via product page

Caption: Patch-Clamp Experimental Workflow.

# Experimental Protocols

## Excised Inside-Out Patch-Clamp Electrophysiology

This protocol is adapted from studies investigating **GoSlo-SR-5-69** effects on BK channels in rabbit bladder smooth muscle cells.[6][7]

© 2026 BenchChem. All rights reserved.

1. Cell Preparation:

- Isolate smooth muscle cells from the desired tissue (e.g., rabbit bladder) by enzymatic digestion.
- Plate the isolated cells on 35 mm Petri dishes and culture under appropriate conditions.

2. Solutions:

- Pipette Solution (Symmetrical K+):
  - 140 mM KCl
  - 10 mM HEPES
  - 10 mM Glucose
  - pH adjusted to 7.2 with KOH
- Bath Solution (Symmetrical K+ with varying [Ca2+]):
  - 140 mM KCl
  - 10 mM HEPES
  - 10 mM Glucose
  - pH adjusted to 7.2 with KOH
  - For 100 nM [Ca2+]: Add 1 mM EGTA. The final free [Ca2+] should be calculated using appropriate software.
  - For >300 nM [Ca2+] (e.g., 1 µM): Add 1 mM HEDTA. The final free [Ca2+] should be calculated using appropriate software.

3. **GoSlo-SR-5-69** Stock Solution:

- Prepare a high-concentration stock solution (e.g., 10-100 mM) of **GoSlo-SR-5-69** in DMSO.

© 2026 BenchChem. All rights reserved.

- On the day of the experiment, dilute the stock solution to the desired final concentrations in the bath solution. Note that the final DMSO concentration should be kept low (typically <0.1%) to avoid solvent effects.

4. Electrophysiological Recording:

- Perform experiments at 37°C using the excised inside-out patch-clamp configuration.
- Use borosilicate glass pipettes with a resistance of 3-5 MΩ when filled with the pipette solution.
- After forming a gigaseal and excising the patch, hold the membrane potential at a negative value (e.g., -60 mV).
- Evoke BK channel currents using voltage ramps (e.g., from -100 mV to +100 mV over 200 ms) or voltage steps.
- Record baseline currents in the control bath solution with the desired [Ca2+].
- Perfuse the patch with bath solutions containing various concentrations of **GoSlo-SR-5-69** and record the resulting currents.
- To confirm the recorded currents are from BK channels, a specific blocker like Penitrem A (100 nM) or Iberiotoxin can be used at the end of the experiment.

5. Data Analysis:

- Measure the current amplitude at different voltages from the recorded traces.
- Calculate the channel conductance (G) at each voltage using the equation G = I / (V - Erev), where I is the current, V is the membrane potential, and Erev is the reversal potential for K+ (which is 0 mV in symmetrical K+ solutions).
- Plot the normalized conductance (G/Gmax) against the membrane potential and fit the data with a Boltzmann function to determine the half-maximal activation voltage (V1/2).
- The shift in V1/2 (ΔV1/2) is calculated as V1/2 (with drug) - V1/2 (control).

© 2026 BenchChem. All rights reserved.

- To determine the EC50, plot the ΔV1/2 against the concentration of **GoSlo-SR-5-69** and fit the data with a Hill equation.

## Calcium Concentration Considerations

The activation of BK channels is synergistically regulated by membrane voltage and intracellular calcium.[2][4] **GoSlo-SR-5-69** enhances the sensitivity of the channel to both stimuli. Therefore, the observed potency of **GoSlo-SR-5-69** will be dependent on the [Ca2+]i used in the assay.

- Low Calcium Concentrations (e.g., 100 nM): At resting intracellular calcium levels, BK channels are predominantly closed at negative membrane potentials. **GoSlo-SR-5-69** will cause a significant leftward shift in the V1/2, making the channels more likely to open at physiological membrane potentials. This condition is ideal for assessing the intrinsic activity of the compound in sensitizing the voltage-sensing domain of the channel.

- Elevated Calcium Concentrations (e.g., 1 µM): During cellular activities that lead to calcium influx or release from internal stores, the increased [Ca2+]i will already shift the V1/2 to more negative potentials.[6][7] In the presence of **GoSlo-SR-5-69**, this effect will be further potentiated, leading to robust channel activation even at very negative membrane potentials. This is relevant for understanding the compound's effect under conditions of cellular stimulation.

- Experimental Design: When comparing the potency of different BK channel activators or studying the mechanism of action of **GoSlo-SR-5-69**, it is crucial to perform experiments at a constant and well-defined [Ca2+]i. It is recommended to test the compound across a range of calcium concentrations (e.g., from 100 nM to 10 µM) to fully characterize its calcium-dependent activity.

## Downstream Cellular Consequences of BK Channel Activation

The activation of BK channels by **GoSlo-SR-5-69** leads to membrane hyperpolarization, which has distinct consequences in different cell types.

### In Smooth Muscle:

© 2026 BenchChem. All rights reserved.

Activation of BK channels in smooth muscle cells leads to membrane hyperpolarization, which closes voltage-dependent Ca2+ channels, reduces global intracellular Ca2+, and ultimately results in muscle relaxation.[3][8] This makes BK channel activators like **GoSlo-SR-5-69** potential therapeutics for conditions characterized by smooth muscle hypercontractility, such as overactive bladder or hypertension.

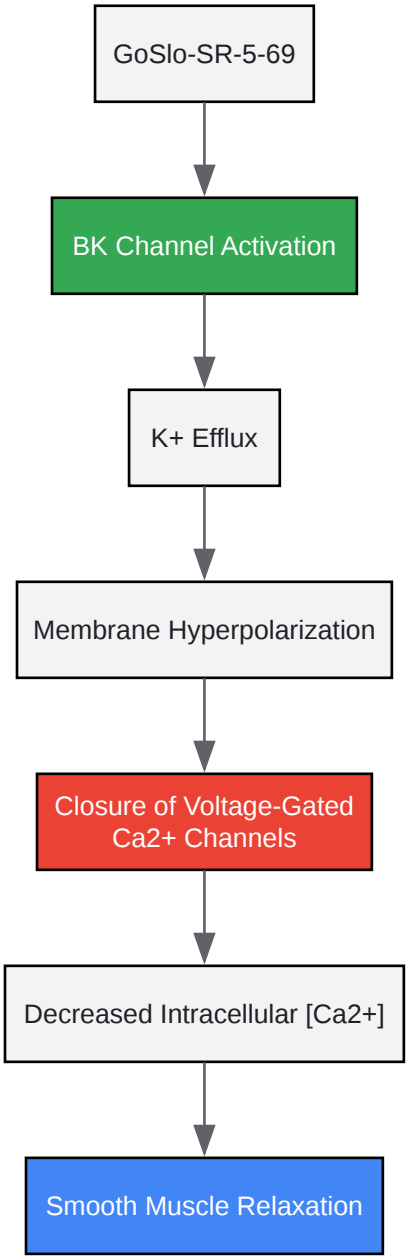


Click to download full resolution via product page

Caption: Downstream Effects in Smooth Muscle.

© 2026 BenchChem. All rights reserved.

## In Neurons:

In neurons, BK channels play a key role in shaping the action potential and regulating neurotransmitter release.[2][9] By promoting rapid repolarization of the action potential, BK channel activation can increase the firing frequency. However, the resulting afterhyperpolarization can also decrease neuronal excitability. The net effect depends on the specific neuronal type and the subcellular location of the channels.[10] Activation of presynaptic BK channels can reduce neurotransmitter release by shortening the duration of the action potential and thereby limiting Ca2+ influx.[9]

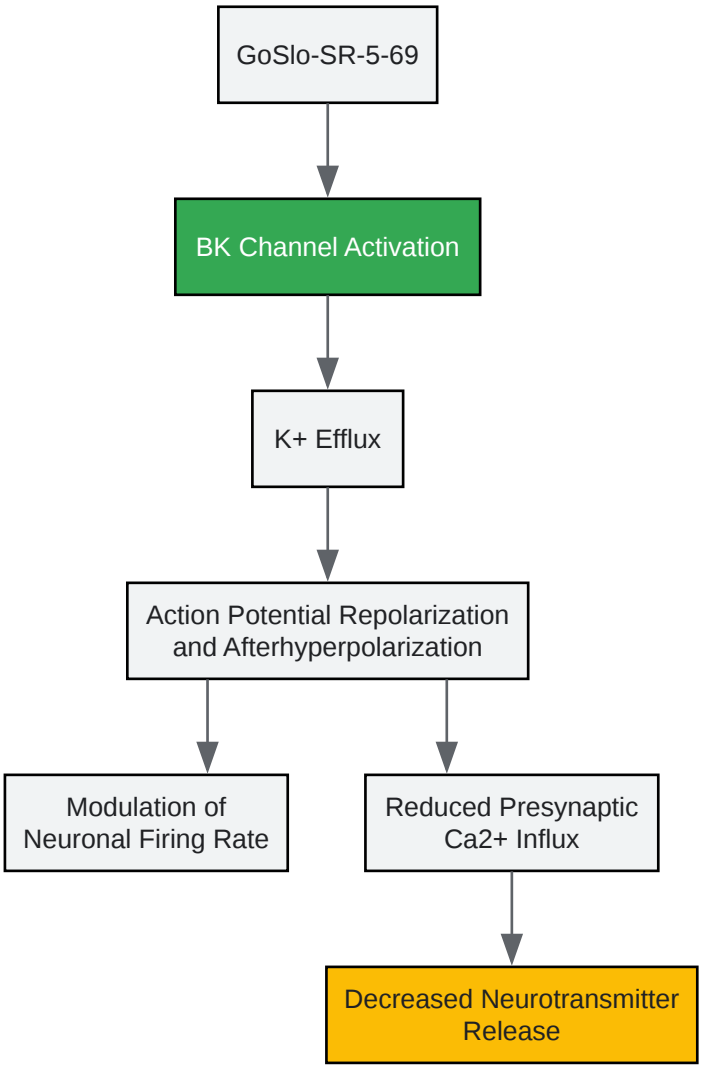


Click to download full resolution via product page

Caption: Downstream Effects in Neurons.

© 2026 BenchChem. All rights reserved.

## Conclusion

**GoSlo-SR-5-69** is a valuable pharmacological tool for studying the physiological and pathophysiological roles of BK channels. A thorough understanding of its calcium-dependent mechanism of action is essential for the accurate interpretation of experimental results and for its potential development as a therapeutic agent. The protocols and data provided in these application notes offer a comprehensive guide for researchers working with this potent BK channel activator. Further investigation into the dose-response relationship of **GoSlo-SR-5-69** across a wider range of calcium concentrations would provide a more complete picture of its pharmacological profile.

***Need Custom Synthesis?***

*BenchChem offers custom synthesis for rare earth carbides and specific isotopiclabeling.*

*Email: info@benchchem.com or Request Quote Online.*

## References

- 1. bio-techne.com [bio-techne.com]
- 2. BK channel - Wikipedia [en.wikipedia.org]
- 3. Central role of the BK channel in urinary bladder smooth muscle physiology and pathophysiology - PMC [pmc.ncbi.nlm.nih.gov]
- 4. Frontiers | BK channel activators and their therapeutic perspectives [frontiersin.org]
- 5. researchgate.net [researchgate.net]
- 6. physoc.org [physoc.org]
- 7. researchgate.net [researchgate.net]
- 8. Calcium- and voltage-gated BK channels in vascular smooth muscle - PMC [pmc.ncbi.nlm.nih.gov]
- 9. BK Channels in the Central Nervous System - PMC [pmc.ncbi.nlm.nih.gov]
- 10. Frontiers | The Impact of BK Channels on Cellular Excitability Depends on their Subcellular Location [frontiersin.org]
- To cite this document: BenchChem. [Application Notes and Protocols for GoSlo-SR-5-69: Calcium Concentration Considerations]. BenchChem, [2026]. [Online PDF]. Available at:

[https://www.benchchem.com/product/b2989940/docs#application-notes-and-protocols-for-goslo-sr-5-69-calcium-concentration-considerations]

---

**Disclaimer & Data Validity:**

The information provided in this document is for Research Use Only (RUO) and is strictly not intended for diagnostic or therapeutic procedures. While BenchChem strives to provide accurate protocols, we make no warranties, express or implied, regarding the fitness of this product for every specific experimental setup.

**Technical Support:**The protocols provided are for reference purposes. Unsure if this reagent suits your experiment?

**Need Industrial/Bulk Grade?** Request Custom Synthesis Quote

BenchChem

Our mission is to be the trusted global source of essential and advanced chemicals, empowering scientists and researchers to drive progress in science and industry.

Contact

Address: 3281 E Guasti Rd

Ontario, CA 91761, United States

Phone: (601) 213-4426

Email: info@benchchem.com

Contact our Ph.D. Support Team for a compatibility check

© 2026 BenchChem. All rights reserved.