Technical Support Center: Minimizing Variability in VII-31 Assays

Author: BenchChem Technical Support Team. **Date**: April 2026

Compound of Interest

Compound Name:	*VII-31*
CAS No.:	*2305757-96-2*
Cat. No.:	*B2925028*

Get Quote

This technical support center provides comprehensive guidance for researchers, scientists, and drug development professionals to minimize variability in **VII-31** assays. The information is presented in a question-and-answer format, including troubleshooting guides and frequently asked questions (FAQs), to directly address specific issues encountered during experiments.

Frequently Asked Questions (FAQs)

Q1: What is a **VII-31** assay?

A **VII-31** assay is a specialized cell-based assay designed to measure the activity of the **VII-31** signaling pathway. Given the specificity of the term "**VII-31**," it may refer to a proprietary in-house assay or a specific target. In the context of this guide, we will address principles applicable to a hypothetical **VII-31** reporter assay, using the well-characterized Interleukin-31 (IL-31) reporter assay as a practical example. IL-31 is a cytokine involved in inflammatory responses, and its signaling is often studied using reporter cell lines.[1][2][3]

Q2: What are the primary sources of variability in cell-based assays like the **VII-31** assay?

© 2026 BenchChem. All rights reserved.

Variability in cell-based assays can be broadly categorized into three main sources: biological, procedural, and instrumental.

- Biological Variability: This stems from the inherent differences in living cells, including cell line heterogeneity, passage number, cell health, and lot-to-lot variations in reagents like fetal bovine serum (FBS).[4][5][6][7][8]
- Procedural Variability: This is introduced by the person performing the assay and includes inconsistencies in pipetting, cell seeding, incubation times, and reagent preparation.[9][10]
- Instrumental Variability: This arises from the equipment used, such as plate readers, incubators, and pipettes. Fluctuations in temperature, CO2 levels, and detector sensitivity can all contribute to variability.

Q3: What is an acceptable level of variability in a **VII-31** assay?

The acceptable level of variability is often determined by the assay's purpose. A common metric used to assess variability is the coefficient of variation (%CV). Generally, for in-assay replicates (intra-assay precision), a %CV of less than 10% is considered acceptable. For results between different assays (inter-assay precision), a %CV of less than 15-20% is often the target.[11][12][13][14]

Troubleshooting Guides

This section provides solutions to common problems encountered during **VII-31** assays.

Problem 1: High Variability Between Replicates (High Intra-Assay %CV)

Possible Causes & Solutions

© 2026 BenchChem. All rights reserved.

Cause	Solution
Inconsistent Cell Seeding	Ensure a homogenous single-cell suspension before and during plating. Gently swirl the cell suspension flask between pipetting steps. Use a multichannel pipette for simultaneous dispensing into replicate wells. Allow the plate to sit at room temperature for 15-20 minutes before placing it in the incubator to ensure even cell settling.[9]
Pipetting Errors	Calibrate pipettes regularly. Use appropriate pipette volumes for the desired range. Employ reverse pipetting for viscous solutions. Change pipette tips for each reagent and sample to avoid cross-contamination.
Edge Effects	To minimize evaporation from the outer wells, which can concentrate reagents and affect cell growth, fill the peripheral wells with sterile phosphate-buffered saline (PBS) or culture medium and do not use them for experimental data points.[11]
Temperature Gradients	Avoid stacking plates in the incubator, as this can lead to uneven temperature distribution. Ensure the incubator is properly calibrated and maintains a stable temperature.[10]
Incomplete Reagent Mixing	Thoroughly mix all reagents before use by gentle inversion or vortexing, as appropriate. Prepare a master mix of reagents for addition to multiple wells to ensure consistency.

Problem 2: High Variability Between Experiments (High Inter-Assay %CV)

Possible Causes & Solutions

© 2026 BenchChem. All rights reserved.

Cause	Solution
Cell Passage Number	Use cells within a consistent and defined passage number range for all experiments. High-passage cells can exhibit altered growth rates and signaling responses. Document the passage number for each experiment.
Lot-to-Lot Reagent Variability	Qualify new lots of critical reagents, such as FBS and antibodies, before use in experiments.[4][5][6][7][8] If possible, purchase a large single lot of critical reagents to ensure consistency over a series of experiments.
Inconsistent Incubation Times	Strictly adhere to the specified incubation times for cell treatment and reagent additions. Use a timer to ensure consistency across all experiments.
Variations in Cell Health	Monitor cell viability and morphology before each experiment. Only use healthy, actively growing cells. Avoid using cells that are overgrown or have been in culture for extended periods without passaging.
Instrument Performance	Perform regular maintenance and calibration of all laboratory equipment, including incubators, plate readers, and pipettes. Use the same instrument settings (e.g., gain, integration time) for all experiments.

Problem 3: Weak or No Signal

Possible Causes & Solutions

© 2026 BenchChem. All rights reserved.

Cause	Solution
Inactive Reagents	Check the expiration dates of all reagents. Store reagents under the recommended conditions. Prepare fresh working solutions for each experiment.
Low Cell Number	Ensure the correct number of cells are seeded per well. Perform a cell count before plating. Optimize the cell seeding density for your specific assay.
Suboptimal Agonist/Antagonist Concentration	Perform a dose-response curve to determine the optimal concentration of your VII-31 agonist or antagonist.
Insufficient Incubation Time	Optimize the incubation time for the cell treatment to allow for a robust signal to develop.
Incorrect Plate Reader Settings	Ensure the plate reader is set to the correct wavelength and sensitivity for your assay's detection method (e.g., luminescence, fluorescence).

Problem 4: High Background Signal

Possible Causes & Solutions

© 2026 BenchChem. All rights reserved.

Cause	Solution
Contamination	Use sterile techniques throughout the experimental workflow to prevent microbial contamination. Regularly test cell cultures for mycoplasma.
Autofluorescence/Autoluminescence	Use appropriate negative controls (e.g., cells only, vehicle control) to determine the baseline signal. If using fluorescent detection, consider using phenol red-free medium.
Non-specific Antibody Binding	If your assay involves antibodies, ensure that appropriate blocking steps are included in the protocol. Titrate antibody concentrations to find the optimal balance between signal and background.
Serum Components	Some components in FBS can contribute to background signal. Consider heat-inactivating the serum or using a serum-free medium if compatible with your cells.[1]

Quantitative Data on Sources of Variability

The following table summarizes potential sources of variability in cell-based assays and their estimated contribution to the overall coefficient of variation (%CV). These values are illustrative and can vary depending on the specific assay and laboratory practices.

© 2026 BenchChem. All rights reserved.

Source of Variability	Typical Intra-Assay %CV	Typical Inter-Assay %CV
Pipetting Error	1-10%	2-15%
Cell Seeding Density	5-15%	10-25%
Reagent Lot-to-Lot Variation	<1%	10-50%
Incubation Time/Temperature	1-5%	5-15%
Plate Reader/Instrument	1-3%	2-5%
Biological (Cell Line Drift)	N/A	10-30%

Data synthesized from multiple sources.[14][15]

Experimental Protocols

This section provides a detailed methodology for a representative cell-based reporter assay, which can be adapted for a **VII-31** assay. The example provided is for an IL-31 Luciferase Reporter Assay using HEK293 cells.[16]

Materials:

- IL-31 Responsive Luciferase Reporter HEK293 Cell Line
- Thaw Medium (e.g., MEM with 10% FBS, 1% Penicillin/Streptomycin)
- Assay Medium (e.g., MEM with 0.5% FBS, 1% Penicillin/Streptomycin)
- Recombinant Human IL-31 (or **VII-31** agonist)
- Test compound (e.g., **VII-31** antagonist)
- 96-well white, clear-bottom tissue culture-treated plates
- Luciferase assay reagent (e.g., ONE-Step™ Luciferase Assay System)
- Luminometer

© 2026 BenchChem. All rights reserved.

Protocol:

- Cell Seeding:
  - The day before the assay, trypsinize and resuspend the IL-31 reporter cells in Thaw Medium at a concentration of 300,000 cells/mL.
  - Dispense 100 µL of the cell suspension into each well of a 96-well plate (30,000 cells/well).
  - Incubate the plate overnight at 37°C in a 5% CO2 incubator.
- Agonist/Antagonist Treatment:
  - The next day, gently remove the Thaw Medium from the wells.
  - Prepare serial dilutions of your test compound (antagonist) and the IL-31 agonist in Assay Medium.
  - For antagonist testing, add 50 µL of the diluted test compound to the wells and incubate for 30 minutes at 37°C.
  - Add 50 µL of the diluted IL-31 agonist to the wells (final volume 100 µL). Include appropriate controls (untreated cells, cells with agonist only).
  - Incubate the plate for 5-6 hours at 37°C in a 5% CO2 incubator.
- Luciferase Assay:
  - Equilibrate the luciferase assay reagent to room temperature.
  - Add 100 µL of the luciferase assay reagent to each well.
  - Incubate the plate at room temperature for approximately 15 minutes with gentle shaking to ensure cell lysis and signal stabilization.
  - Measure luminescence using a luminometer.

© 2026 BenchChem. All rights reserved.

Visualizations

Signaling Pathway Diagram

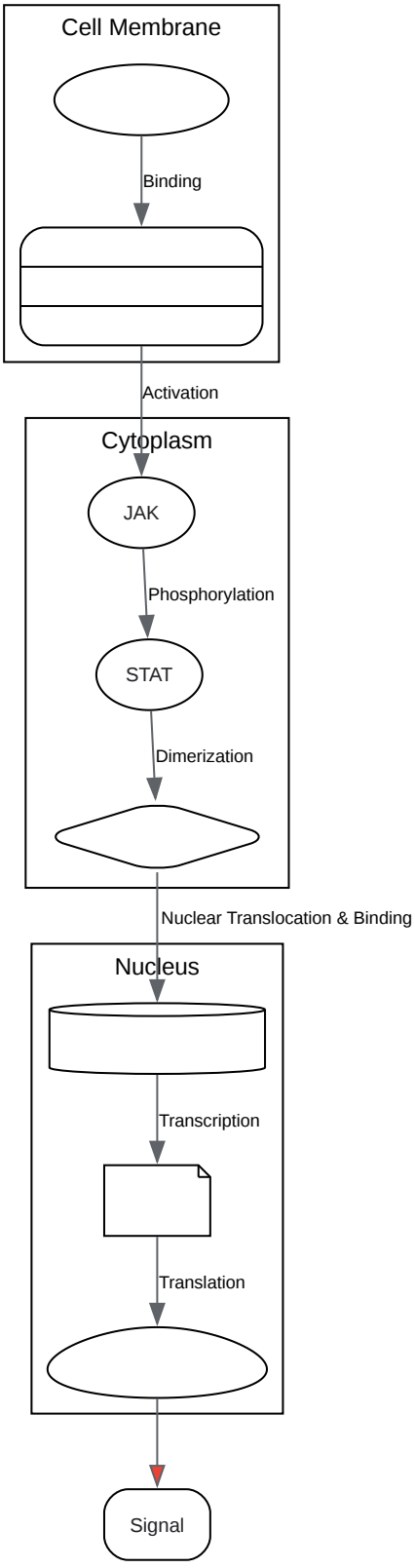

© 2026 BenchChem. All rights reserved.

Click to download full resolution via product page

Caption: Hypothetical **VII-31** signaling pathway leading to reporter gene expression.

Experimental Workflow Diagram

© 2026 BenchChem. All rights reserved.

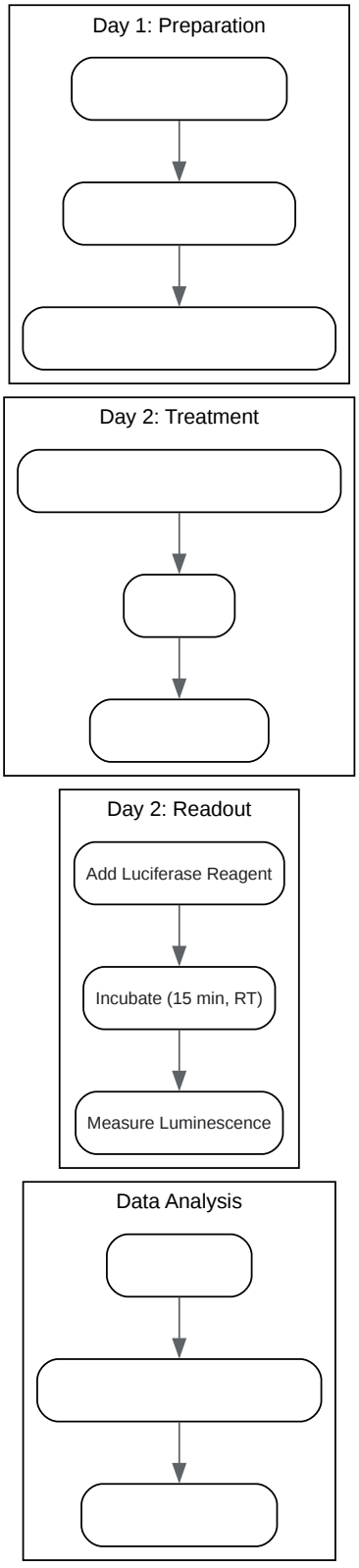

Click to download full resolution via product page

Caption: General experimental workflow for a two-day cell-based reporter assay.

© 2026 BenchChem. All rights reserved.

Troubleshooting Logic Diagram

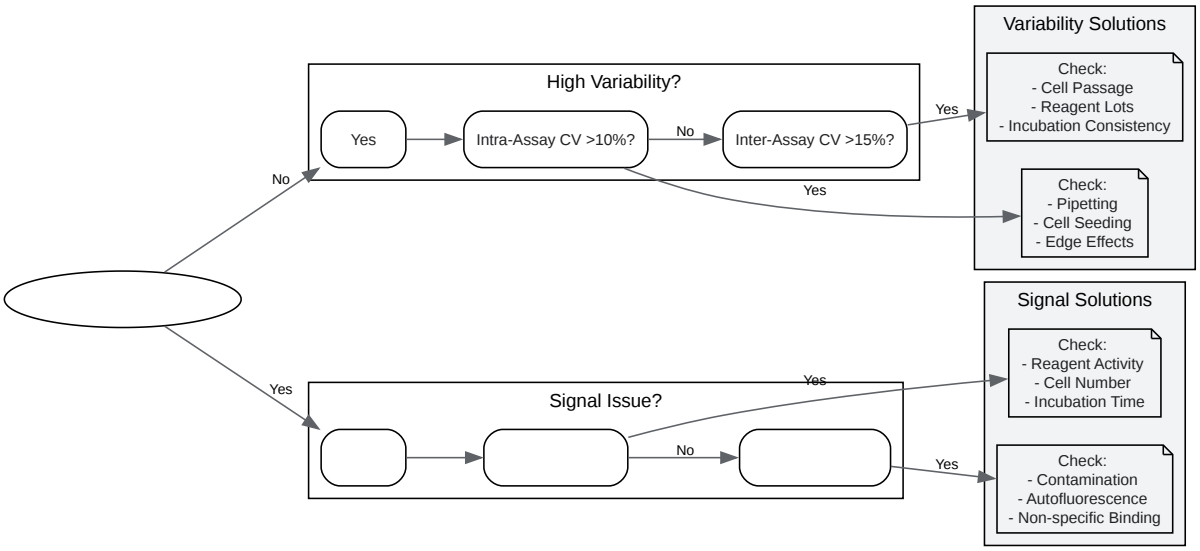

Click to download full resolution via product page

Caption: A logical workflow for troubleshooting common issues in **VII-31** assays.

Need Custom Synthesis?

BenchChem offers custom synthesis for rare earth carbides and specific isotopiclabeling.

Email: info@benchchem.com or Request Quote Online.

References

- 1. invivogen.com [invivogen.com]

© 2026 BenchChem. All rights reserved.

- 2. Human Th2 but not Th9 cells release IL-31 in a STAT6/NF-κB-dependent way - PMC [pmc.ncbi.nlm.nih.gov]
- 3. HEK293-Human IL-31 RA/OSMR (Luc)-Reporter Cell - Creative Bioarray [dda.creative-bioarray.com]
- 4. How to Manage Serum Batch Variability in Cell Culture [procellsystem.com]
- 5. fujifilmbiosciences.fujifilm.com [fujifilmbiosciences.fujifilm.com]
- 6. tandfonline.com [tandfonline.com]
- 7. How Serum Quality Influences Cell Culture Outcomes: Key Factors for Reliable and Reproducible Results / Blog / Info`s | seamlessbio [seamlessbio.de]
- 8. biocompare.com [biocompare.com]
- 9. sartorius.com [sartorius.com]
- 10. biocompare.com [biocompare.com]
- 11. What causes high coefficient variation for my ELISA results? | AAT Bioquest [aatbio.com]
- 12. Multiplate cell-based assays with Maestro TrayZ for cytotoxicity and potency | Axion Biosystems [axionbiosystems.com]
- 13. salimetrics.com [salimetrics.com]
- 14. Optimisation, harmonisation and standardisation of the direct mycobacterial growth inhibition assay using cryopreserved human peripheral blood mononuclear cells - PMC [pmc.ncbi.nlm.nih.gov]
- 15. Samples in many cell-based experiments are matched/paired but taking this into account does not always increase power of statistical tests for differences in means - PMC [pmc.ncbi.nlm.nih.gov]
- 16. bpsbioscience.com [bpsbioscience.com]

- To cite this document: BenchChem. [Technical Support Center: Minimizing Variability in VII-31 Assays]. BenchChem, [2026]. [Online PDF]. Available at: [https://www.benchchem.com/product/b2925028/docs#technical-support-center-minimizing-variability-in-vii-31-assays]

Disclaimer & Data Validity:

The information provided in this document is for Research Use Only (RUO) and is strictly not intended for diagnostic or therapeutic procedures. While BenchChem strives to provide

© 2026 BenchChem. All rights reserved.

accurate protocols, we make no warranties, express or implied, regarding the fitness of this product for every specific experimental setup.

Technical Support: The protocols provided are for reference purposes. Unsure if this reagent suits your experiment?

Need Industrial/Bulk Grade? Request Custom Synthesis Quote

BenchChem

Our mission is to be the trusted global source of essential and advanced chemicals, empowering scientists and researchers to drive progress in science and industry.

Contact

Address: 3281 E Guasti Rd

Ontario, CA 91761, United States

Phone: (601) 213-4426

Email: info@benchchem.com

Contact our Ph.D. Support Team for a compatibility check

© 2026 BenchChem. All rights reserved.