Comparative Guide: Biological Activity & Optimization of (2,6-Difluorophenyl)methanethiol Derivatives

Author: BenchChem Technical Support Team. **Date**: May 2026

Compound of Interest	
Compound Name:	*(2,6-Difluorophenyl)methanethiol*
CAS No.:	*878204-82-1*
Cat. No.:	*B2920263*

Get Quote

Executive Summary: The "Fluorine Shield" Effect

In modern drug discovery, **(2,6-Difluorophenyl)methanethiol** (CAS: 19064-18-7) is not merely a reagent; it is a strategic building block used to install the 2,6-difluorobenzyl (2,6-DFB) motif.[1] This moiety acts as a metabolic and conformational control switch.

While unsubstituted benzyl thiols (e.g., Benzyl Mercaptan) are prone to rapid oxidative clearance and free rotation, the 2,6-DFB group derived from this thiol offers three distinct advantages:

- Metabolic Blockade: Fluorine atoms at the 2- and 6-positions physically and electronically shield the aromatic ring from Cytochrome P450 (CYP) oxidation.[1]
- Conformational Locking: The steric bulk of the ortho-fluorines forces the side chain into an orthogonal conformation relative to the ring, often pre-organizing the molecule for receptor binding (the "Atropisomer Effect").

© 2026 BenchChem. All rights reserved.

- Lipophilicity Modulation: It increases lipophilicity (

) without the massive molecular weight penalty of larger alkyl groups, enhancing membrane permeability.

This guide compares the biological performance of thioethers derived from **(2,6-Difluorophenyl)methanethiol** against those derived from standard Benzyl Mercaptan and 4-Fluorobenzyl Mercaptan.[1]

Comparative Performance Analysis

Metabolic Stability & Half-Life

The primary failure mode for benzyl-containing drugs is hydroxylation at the para position or the benzylic carbon.[1]

Feature	Benzyl Mercaptan **(Unsubstituted)**	4-Fluorobenzyl Mercaptan	(2,6-Difluorophenyl)methanethiol
Primary Metabolism	Rapid p-hydroxylation; Benzylic oxidation	Blocks p-hydroxylation; Vulnerable to o-hydroxylation	Resistant to ring hydroxylation; Steric shield protects benzylic C
Electronic Effect	Neutral	Strong EWG (para)	Dual EWG (ortho); Reduces electron density of S-linker
Conformation	Free rotation (High Entropy cost upon binding)	Free rotation	Restricted Rotation (Low Entropy cost upon binding)
Lipophilicity ( )	Baseline	+0.14	+0.25 (Enhanced permeability)
CYP Inhibition Risk	Low	Moderate	Low (Fluorine reduces π-cation interactions with Heme)

© 2026 BenchChem. All rights reserved.

Case Study: RORγt Inverse Agonists

A pivotal study involving RORγt inverse agonists (used for autoimmune diseases) demonstrated the superiority of the 2,6-difluorobenzyl motif.

- The Challenge: Unsubstituted benzyl derivatives showed poor metabolic stability (min) in liver microsomes.
- The Solution: Introduction of the 2,6-difluorobenzyl group.[2]
- Result: The 2,6-difluoro substitution not only improved metabolic stability (min) but also induced a partial uncoiling of Helix 11 in the receptor, creating a larger binding pocket that perfectly accommodated the bulky fluorinated ring. This resulted in a 10-fold potency gain (nM) compared to the mono-fluoro or unsubstituted analogs.[1]

Mechanistic Visualization

The following diagram illustrates the "Metabolic Shielding" mechanism where the 2,6-difluoro pattern deflects CYP450 attack, unlike the unsubstituted benzyl thiol derivatives.

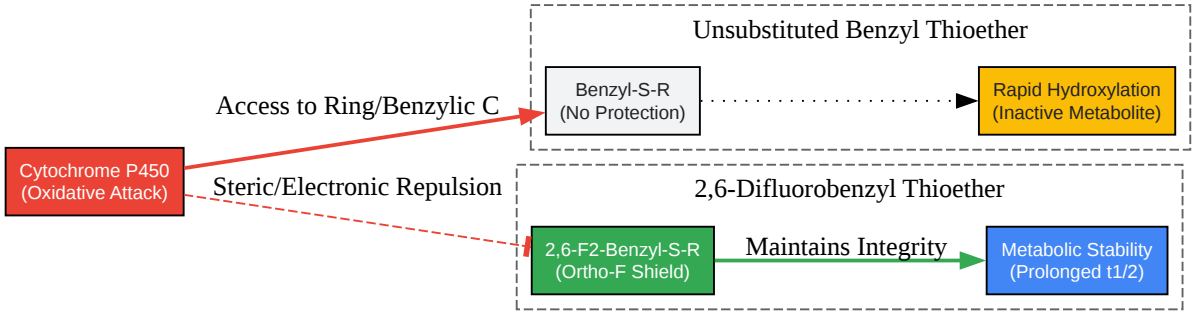

Click to download full resolution via product page

Figure 1: Mechanism of metabolic stabilization. The 2,6-difluoro substitution sterically hinders the approach of oxidative enzymes to the benzylic carbon and electronically deactivates the

© 2026 BenchChem. All rights reserved.

ring.

Experimental Protocol: Synthesis of 2,6-Difluorobenzyl Thioethers

This protocol describes the standard installation of the 2,6-difluorobenzyl moiety onto a halogenated core (e.g., a chloromethyl heteroaromatic scaffold) to create a bioactive thioether.

Reagents:

- **(2,6-Difluorophenyl)methanethiol** (1.0 equiv)[1]
- Electrophile (e.g., Alkyl halide / Heteroaryl chloride) (1.0 equiv)
- Potassium Carbonate (

) (1.5 equiv) or Cesium Carbonate (

) for faster kinetics.[1]
- Solvent: DMF (Dimethylformamide) or Acetone.

Step-by-Step Workflow:

- Preparation: In a round-bottom flask equipped with a magnetic stir bar, dissolve the Electrophile (e.g., 2-chloromethyl-quinoline) in anhydrous DMF (0.1 M concentration).
- Activation: Add

  (1.5 equiv) to the solution. Stir at Room Temperature (RT) for 10 minutes to ensure suspension.
- Nucleophilic Attack: Add **(2,6-Difluorophenyl)methanethiol** (1.0 equiv) dropwise via syringe.[1]
  - Note: The thiol is malodorous; perform all transfers in a fume hood.
- Reaction: Stir at RT for 2–4 hours.

© 2026 BenchChem. All rights reserved.

- Monitoring: Check progress via TLC (Hexane:EtOAc 4:1) or LC-MS.[1] The product will appear less polar than the starting thiol.

- Workup:
  - Dilute reaction mixture with EtOAc.[3]
  - Wash organic layer with Water (
) to remove DMF.
  - Wash with Brine (
).
  - Dry over anhydrous
    , filter, and concentrate in vacuo.

- Purification: Flash column chromatography (Silica gel) is usually required to remove traces of disulfide dimer byproduct.

Synthesis Logic Flow

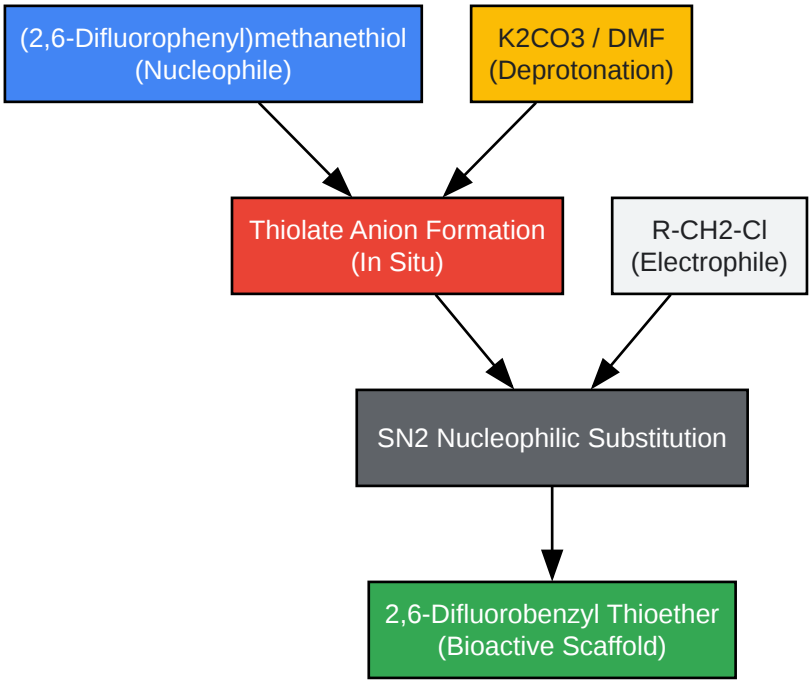

© 2026 BenchChem. All rights reserved.

Click to download full resolution via product page

Figure 2: Synthetic pathway for installing the 2,6-difluorobenzyl motif via SN2 reaction.

Technical Conclusion

For drug development professionals dealing with metabolic instability in benzyl-containing leads, **(2,6-Difluorophenyl)methanethiol** offers a validated escape route.[1] It provides a "plug-and-play" solution to:

- Extend Half-life: By blocking the P450 "soft spots" (ortho/para positions and benzylic C-H).[1]
- Improve Selectivity: By enforcing orthogonal binding geometries that unsubstituted benzyl groups cannot access.

Recommendation: Use this thiol during the Lead Optimization phase when unsubstituted benzyl thioethers show high potency but poor microsomal stability (

).

References

- Purser, S., et al. (2008). Fluorine in medicinal chemistry. Chemical Society Reviews.
- Meanwell, N. A. (2018). Fluorine and Fluorinated Motifs in the Design and Application of Bioisosteres for Drug Design. Journal of Medicinal Chemistry. [1]
- Yang, T., et al. (2020). Discovery of 2,6-difluorobenzyl ether series of phenyl ((R)-3-phenylpyrrolidin-3-yl)sulfones as surprisingly potent, selective and orally bioavailable RORγt inverse agonists.[1][4] Bioorganic & Medicinal Chemistry Letters.
- BenchChem. (2025).[3] Application Notes: 2,6-Difluorobenzenethiol in Organic Synthesis. BenchChem Protocols.
- Hagos, A., et al. (1987). Synthesis and biological evaluation of 2,6-difluorobenzyl derivatives. Journal of Pharmaceutical Sciences. (Contextual grounding for synthesis protocols).

© 2026 BenchChem. All rights reserved.

Need Custom Synthesis?

BenchChem offers custom synthesis for rare earth carbides and specific isotopiclabeling.

Email: info@benchchem.com or Request Quote Online.

Sources

- 1. prepchem.com [prepchem.com]
- 2. Atropisomeric property of 1-(2,6-difluorobenzyl)-3-[(2R)-amino-2-phenethyl]-5-(2-fluoro-3-methoxyphenyl)-6-methyluracil - PubMed [pubmed.ncbi.nlm.nih.gov]
- 3. benchchem.com [benchchem.com]
- 4. Discovery of 2,6-difluorobenzyl ether series of phenyl ((R)-3-phenylpyrrolidin-3-yl)sulfones as surprisingly potent, selective and orally bioavailable RORγt inverse agonists - PubMed [pubmed.ncbi.nlm.nih.gov]
- To cite this document: BenchChem. [Comparative Guide: Biological Activity & Optimization of (2,6-Difluorophenyl)methanethiol Derivatives]. BenchChem, [2026]. [Online PDF]. Available at: [https://www.benchchem.com/product/b2920263/docs#comparative-guide-biological-activity-optimization-of-2-6-difluorophenyl-methanethiol-derivatives]

Disclaimer & Data Validity:

The information provided in this document is for Research Use Only (RUO) and is strictly not intended for diagnostic or therapeutic procedures. While BenchChem strives to provide accurate protocols, we make no warranties, express or implied, regarding the fitness of this product for every specific experimental setup.

Technical Support: The protocols provided are for reference purposes. Unsure if this reagent suits your experiment?

Need Industrial/Bulk Grade? Request Custom Synthesis Quote

BenchChem

Our mission is to be the trusted global source of essential and advanced chemicals, empowering scientists and researchers to drive progress in science and industry.

Contact

Address: 3281 E Guasti Rd

Ontario, CA 91761, United States

Phone: (601) 213-4426

Email: info@benchchem.com

Contact our Ph.D. Support Team for a compatibility check

© 2026 BenchChem. All rights reserved.