Technical Support Center: Optimizing Vilsmeier-Haack Reaction Conditions for Substituted Pyrroles

Author: BenchChem Technical Support Team. **Date**: May 2026

Compound of Interest

Compound Name:	*4-formyl-2,5-dimethyl-1H-pyrrole-3-carboxylic Acid*
CAS No.:	*861582-93-6*
Cat. No.:	*B2869490*

Get Quote

Welcome to the technical support center dedicated to the Vilsmeier-Haack formylation of substituted pyrroles. This guide is designed for researchers, scientists, and drug development professionals who utilize this powerful reaction for introducing formyl groups onto the pyrrole nucleus. Here, we move beyond simple protocols to explore the causality behind experimental choices, providing you with the in-depth knowledge required to troubleshoot and optimize your reactions effectively.

Section 1: Frequently Asked Questions (FAQs)

This section addresses fundamental questions about the Vilsmeier-Haack reaction as it applies to pyrrole substrates.

Q1: What is the Vilsmeier-Haack reaction, and why is it so effective for pyrroles?

The Vilsmeier-Haack reaction is a versatile method for formylating electron-rich aromatic and heteroaromatic compounds.[1] It employs a "Vilsmeier reagent," an electrophilic chloroiminium

© 2026 BenchChem. All rights reserved.

ion, which is typically generated in situ from N,N-dimethylformamide (DMF) and an acid chloride like phosphorus oxychloride ($POCl_3$).[2][3]

Pyrrole is a highly electron-rich heterocycle, making it an excellent substrate for this reaction.[4] The reaction proceeds under relatively mild conditions and is often more effective than Friedel-Crafts acylation, which can be complicated by the use of strong Lewis acids that may lead to pyrrole polymerization.[5]

Q2: What is the detailed mechanism of the reaction?

The reaction proceeds in three main stages:

- Formation of the Vilsmeier Reagent: DMF, a substituted amide, reacts with $POCl_3$ to form the highly electrophilic chloroiminium ion, also known as the Vilsmeier reagent.[2]
- Electrophilic Attack: The electron-rich pyrrole ring acts as a nucleophile, attacking the electrophilic carbon of the Vilsmeier reagent to form an intermediate sigma complex.[6] This step is a classic electrophilic aromatic substitution.
- Hydrolysis: The resulting iminium salt intermediate is stable until an aqueous workup is performed. Hydrolysis during the workup phase converts the iminium salt into the final pyrrole aldehyde.[3][7]

© 2026 BenchChem. All rights reserved.

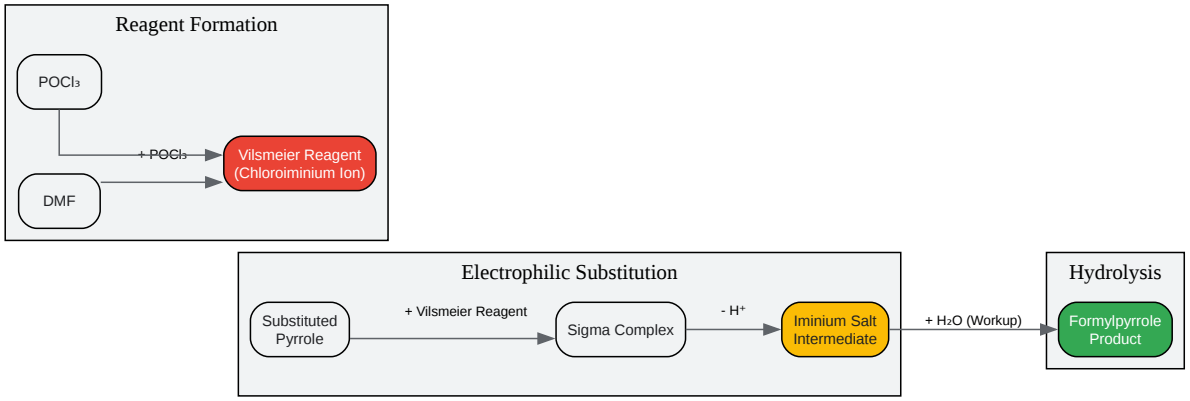

Click to download full resolution via product page

Caption: The Vilsmeier-Haack reaction mechanism.

Q3: How do substituents on the pyrrole ring affect the position of formylation (regioselectivity)?

Regioselectivity is governed by a combination of electronic and steric factors.[8]

- Electronic Effects: Formylation overwhelmingly occurs at the most electron-rich position. For pyrrole itself, this is the α-position (C2 or C5).[6]
  - An electron-donating group (EDG) at the C2 position will activate the ring and direct formylation to the C5 position.[8]
  - An electron-withdrawing group (EWG) at the C2 position deactivates the ring. Formylation, if it occurs, often yields a mixture of the 4- and 5-formylated products.[8][9]
- Steric Hindrance: Bulky substituents on the pyrrole nitrogen (N1) or on a carbon adjacent to a potential reaction site can sterically block the approach of the Vilsmeier reagent, potentially forcing formylation to occur at a less electronically favored but more accessible position (e.g., the β-position, C3 or C4).[8][10]

© 2026 BenchChem. All rights reserved.

Q4: My pyrrole has a strong electron-withdrawing group. What can I do to make the reaction work?

Pyrroles deactivated by strong EWGs (like -CN or -CO_2R) are challenging substrates.[11] The reduced nucleophilicity of the ring requires more forcing conditions. Consider the following strategies:

- Increase Temperature: Carefully raise the reaction temperature, monitoring by TLC to avoid decomposition. Temperatures of 80-100 °C may be necessary.[11][12]
- Increase Reaction Time: Allow the reaction to proceed for a longer duration.
- Increase Reagent Stoichiometry: Use a larger excess of the Vilsmeier reagent.[11]
- Activate the Substrate: For pyridine, a related electron-deficient heterocycle, N-oxide formation is a common strategy to increase ring reactivity.[11] While less common for pyrroles, similar strategies of modifying the EWG to be less deactivating during the reaction could be explored.

Section 2: Troubleshooting Guide

This guide provides solutions to common experimental issues in a question-and-answer format.

© 2026 BenchChem. All rights reserved.

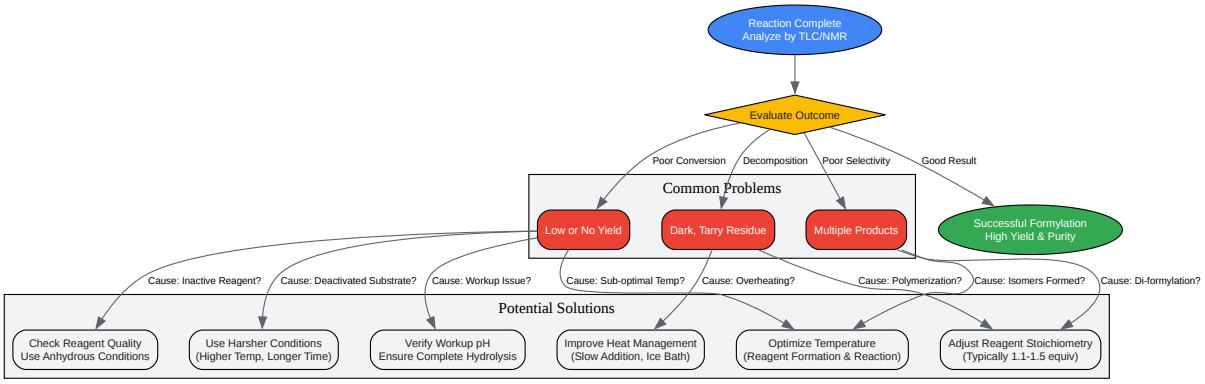

Click to download full resolution via product page

Caption: Troubleshooting workflow for the Vilsmeier-Haack reaction.

Problem: I am getting a low yield or no product at all.

- Potential Cause 1: Inactive Vilsmeier Reagent. The Vilsmeier reagent is highly sensitive to moisture.[13]
  - Solution: Ensure that your DMF and $POCl_3$ are of high purity and, most importantly, anhydrous. Use oven-dried glassware under an inert atmosphere (Nitrogen or Argon). Check the quality of your DMF; old bottles can accumulate dimethylamine from decomposition, which can interfere with the reaction.[14]
- Potential Cause 2: Sub-optimal Reaction Temperature. Temperature control is critical for both stages of the reaction.[8]

© 2026 BenchChem. All rights reserved.

- Solution: The formation of the Vilsmeier reagent from DMF and $POCl_3$ is exothermic and should be performed at a controlled low temperature, typically 0-10 °C, to prevent degradation.[15] However, the subsequent formylation of the pyrrole may require heating. For electron-rich pyrroles, the reaction may proceed at room temperature, while less reactive, electron-poor pyrroles may require heating to 40-80 °C or higher to proceed at a reasonable rate.[8][12]

- Potential Cause 3: Improper Work-up Procedure. The hydrolysis of the intermediate iminium salt is a crucial final step.[8]

  - Solution: The reaction is typically quenched by pouring the mixture onto crushed ice.[16] This hydrolyzes the iminium salt and helps manage the exotherm from quenching excess $POCl_3$. Following the quench, the acidic mixture must be neutralized with a base (e.g., NaOH, $NaHCO_3$, or NaOAc) to liberate the free aldehyde. Inadequate neutralization can lead to very low yields of impure product.[8]

Problem: My reaction mixture turned into a dark, intractable tar.

- Potential Cause 1: Reaction Overheating. The reaction is exothermic, and poor temperature control can lead to polymerization and decomposition of the electron-rich pyrrole substrate.[13]

  - Solution: Maintain strict temperature control throughout the reaction. Prepare the Vilsmeier reagent in an ice bath, and add the pyrrole substrate slowly while monitoring the internal temperature. For large-scale reactions, efficient cooling and controlled addition rates are paramount.[8]

- Potential Cause 2: Substrate Polymerization. Pyrroles are known to polymerize under strongly acidic conditions, which are present during the reaction.

  - Solution: Use only a moderate excess of the Vilsmeier reagent (typically 1.1–1.5 equivalents) to minimize harsh conditions.[8] Running the reaction at the lowest effective temperature can also help suppress polymerization side reactions.

Problem: I am observing multiple products on my TLC plate.

© 2026 BenchChem. All rights reserved.

- Potential Cause 1: Di-formylation. This can occur with highly activated pyrroles or when a large excess of the Vilsmeier reagent is used.[8]
  - Solution: Reduce the stoichiometry of the Vilsmeier reagent. Titrate the amount of reagent used, starting from 1.1 equivalents, to find the optimal balance between complete conversion of the starting material and minimal di-formylation.
- Potential Cause 2: Formation of Regioisomers. As discussed in the FAQs, a mixture of isomers can form, particularly with C2-substituted pyrroles bearing EWGs.[8]
  - Solution: Temperature can influence regioselectivity. Lower temperatures often favor the thermodynamically preferred product and can increase selectivity.[12] If isomers are unavoidable, optimization will need to be followed by careful chromatographic separation.

Section 3: Key Experimental Protocols

Protocol 1: Preparation of the Vilsmeier Reagent

Causality: This procedure must be conducted under anhydrous conditions at low temperature to ensure the formation of a reactive, non-degraded electrophile.

- Setup: Equip a three-necked, round-bottom flask (oven-dried) with a magnetic stirrer, a dropping funnel, a thermometer, and a nitrogen or argon inlet.
- Reagents: Place anhydrous N,N-dimethylformamide (DMF) (1.2 equivalents) in the flask and cool the flask to 0 °C using an ice-salt bath.
- Addition: Add phosphorus oxychloride ($POCl_3$) (1.1 equivalents) dropwise via the dropping funnel to the cooled, stirring DMF.
- Control: Maintain the internal temperature below 10 °C throughout the addition. The formation of the reagent is exothermic.[8]
- Maturation: After the addition is complete, allow the mixture to stir at 0-5 °C for 30-60 minutes. The reagent is a white solid or a slurry and is now ready for the addition of the pyrrole substrate.

Protocol 2: General Vilsmeier-Haack Formylation of a Substituted Pyrrole

© 2026 BenchChem. All rights reserved.

Causality: This general protocol outlines the controlled addition of the nucleophile (pyrrole) to the pre-formed electrophile (Vilsmeier reagent), followed by a carefully controlled workup to ensure hydrolysis and product isolation.

- Pyrrole Addition: Dissolve the substituted pyrrole (1.0 equivalent) in a minimal amount of an anhydrous solvent (e.g., DMF, dichloroethane).[17] Add this solution dropwise to the pre-formed Vilsmeier reagent at 0-5 °C.
- Reaction: After the addition, allow the reaction to warm to the desired temperature (this is the key variable to optimize, from room temperature to 80 °C or higher). Monitor the reaction's progress by TLC.
- Quench (Work-up): Once the reaction is complete, cool the mixture back to room temperature. In a separate, larger flask, prepare a vigorously stirred mixture of crushed ice and water. Slowly and carefully pour the reaction mixture into the ice water (this is a "reverse quench").[16] This step can be highly exothermic.
- Hydrolysis & Neutralization: Stir the aqueous mixture for 1-2 hours to ensure complete hydrolysis of the iminium salt. Then, carefully neutralize the mixture to a pH of 7-8 by adding a base such as aqueous sodium hydroxide or saturated sodium bicarbonate solution.
- Extraction: Extract the aqueous mixture with a suitable organic solvent (e.g., ethyl acetate, dichloromethane) three times.
- Purification: Combine the organic layers, wash with brine, dry over anhydrous sodium sulfate or magnesium sulfate, filter, and concentrate under reduced pressure. The crude product can then be purified by column chromatography or recrystallization.

Section 4: Data Summary Table

The optimal conditions for the Vilsmeier-Haack reaction are highly substrate-dependent. This table provides general starting points for optimization.

© 2026 BenchChem. All rights reserved.

Pyrrole Substrate Type	Substituent Example	Typical Reagent Equiv.	Typical Temperature	Expected Reactivity	Key Considerations
Unsubstituted /Alkyl-Substituted	Pyrrole, 1-Methylpyrrole	1.1 - 1.3	25 - 50 °C	High	Prone to polymerization if overheated. Good temperature control is crucial.[8]
Electron-Rich	2-Methoxypyrrole	1.1 - 1.2	0 - 25 °C	Very High	Use mildest possible conditions to avoid side reactions and decomposition.[6]
Electron-Withdrawing (Mild)	1-Phenylpyrrole	1.2 - 1.5	40 - 60 °C	Moderate	Steric effects from the N-substituent can influence regioselectivity.[10]
Electron-Withdrawing (Strong)	Ethyl 1H-pyrrole-2-carboxylate	1.5 - 2.5	60 - 100 °C	Low	Requires forcing conditions; monitor for decomposition. May yield isomer mixtures.[8] [18]

© 2026 BenchChem. All rights reserved.

Section 5: References

- BenchChem Technical Support Team. (2025). Optimization of reaction conditions for scaling up pyrrole aldehyde synthesis. BenchChem.
- BenchChem. (2025). The Vilsmeier-Haack Reaction: A Comprehensive Technical Guide to the Synthesis of 5-Formyluracil Derivatives. BenchChem.
- Filo. (2026). Explain the Vilsmeier-Haack reaction and its mechanism. Filo.
- Wikipedia. (n.d.). Vilsmeier–Haack reaction. Wikipedia.
- Chemistry Steps. (2023). Vilsmeier-Haack Reaction. Chemistry Steps.
- Rajput, et al. (2012). REVIEW ARTICLE ON VILSMEIER-HAACK REACTION. International Journal of Pharmaceutical, Chemical and Biological Sciences.
- Organic Chemistry Portal. (n.d.). Vilsmeier-Haack Reaction. Organic Chemistry Portal.
- Wikipedia. (n.d.). Pyrrole. Wikipedia.
- Slideshare. (n.d.). Vilsmeier haack rxn. Slideshare.
- BenchChem. (2025). effect of temperature on Vilsmeier-Haack reaction outcome. BenchChem.
- BenchChem. (2025). Technical Support Center: Vilsmeier-Haack Reaction Workup. BenchChem.
- ResearchGate. (2025). Pyrrole chemistry. XXIV. The Vilsmeier formylation and the cyanation of pyrrole acetals. A synthesis of pyrrole-2,3,5-tricarboxaldehyde. ResearchGate.
- Candy, C. F., Jones, R. A., & Wright, P. H. (1970). Pyrrole studies. Part XV. Vilsmeier–Haack formylation of 1-substituted pyrroles. Journal of the Chemical Society C: Organic.
- J&K Scientific LLC. (2025). Vilsmeier-Haack Reaction. J&K Scientific LLC.

© 2026 BenchChem. All rights reserved.

- Synlett. (2023). Synthetic Utility of the Vilsmeier–Haack Reagent in Organic Synthesis. Thieme.
- ChemTube3D. (n.d.). Pyrrole-The Vilsmeier Reaction. ChemTube3D.
- BenchChem. (n.d.). Troubleshooting guide for the Vilsmeier-Haack formylation of 3-Methylpyrazole. BenchChem.
- Stoessel, F. (2005). Thermal Hazards of the Vilsmeier−Haack Reaction on N,N-Dimethylaniline. Organic Process Research & Development.
- BenchChem. (n.d.). Low yield in Vilsmeier-Haack reaction of 2-cyanopyridine troubleshooting. BenchChem.
- Warashina, T., et al. (2018). Regioselective Formylation of Pyrrole-2-Carboxylate: Crystalline Vilsmeier Reagent vs Dichloromethyl Alkyl Ether. Organic Process Research & Development.
- Reddit. (2021). Having some troubles with a Vislmeier-Haack reaction. Reddit.

Need Custom Synthesis?

BenchChem offers custom synthesis for rare earth carbides and specific isotopiclabeling.

Email: info@benchchem.com or Request Quote Online.

Sources

- 1. benchchem.com [benchchem.com]
- 2. Explain the Vilsmeier-Haack reaction and its mechanism. | Filo [askfilo.com]
- 3. Vilsmeier–Haack reaction - Wikipedia [en.wikipedia.org]
- 4. jk-sci.com [jk-sci.com]
- 5. chemtube3d.com [chemtube3d.com]
- 6. Vilsmeier-Haack Reaction - Chemistry Steps [chemistrysteps.com]
- 7. Vilsmeier-Haack Reaction [organic-chemistry.org]

- 8. pdf.benchchem.com [pdf.benchchem.com]
- 9. researchgate.net [researchgate.net]
- 10. Pyrrole studies. Part XV. Vilsmeier–Haack formylation of 1-substituted pyrroles - Journal of the Chemical Society C: Organic (RSC Publishing) [pubs.rsc.org]
- 11. pdf.benchchem.com [pdf.benchchem.com]
- 12. pdf.benchchem.com [pdf.benchchem.com]
- 13. pdf.benchchem.com [pdf.benchchem.com]
- 14. reddit.com [reddit.com]
- 15. Thieme E-Journals - Synlett / Abstract [thieme-connect.com]
- 16. benchchem.com [benchchem.com]
- 17. ijpcbs.com [ijpcbs.com]
- 18. pubs.acs.org [pubs.acs.org]

- To cite this document: BenchChem. [Technical Support Center: Optimizing Vilsmeier-Haack Reaction Conditions for Substituted Pyrroles]. BenchChem, [2026]. [Online PDF]. Available at: [https://www.benchchem.com/product/b2869490/docs#technical-support-center-optimizing-vilsmeier-haack-reaction-conditions-for-substituted-pyrroles]

Disclaimer & Data Validity:

The information provided in this document is for Research Use Only (RUO) and is strictly not intended for diagnostic or therapeutic procedures. While BenchChem strives to provide accurate protocols, we make no warranties, express or implied, regarding the fitness of this product for every specific experimental setup.

Technical Support: The protocols provided are for reference purposes. Unsure if this reagent suits your experiment?

Need Industrial/Bulk Grade? Request Custom Synthesis Quote

© 2026 BenchChem. All rights reserved.

BenchChem

Our mission is to be the trusted global source of essential and advanced chemicals, empowering scientists and researchers to drive progress in science and industry.

Contact

Address: 3281 E Guasti Rd

Ontario, CA 91761, United States

Phone: (601) 213-4426

Email: info@benchchem.com

Contact our Ph.D. Support Team for a compatibility check

© 2026 BenchChem. All rights reserved.