NS13001 Technical Support Center: Optimizing Concentration for Maximal Efficacy

Author: BenchChem Technical Support Team. **Date**: April 2026

Compound of Interest

Compound Name:	*NS13001*
CAS No.:	*1160852-22-1*
Cat. No.:	*B2864711*

Get Quote

This technical support center provides researchers, scientists, and drug development professionals with comprehensive guidance on utilizing **NS13001**, a selective positive allosteric modulator of SK2 and SK3 channels. Below you will find troubleshooting advice, frequently asked questions, detailed experimental protocols, and key data to ensure the maximal efficacy of **NS13001** in your experiments.

Frequently Asked Questions (FAQs)

Q1: What is the mechanism of action of **NS13001**?

A1: **NS13001** is a positive allosteric modulator of small-conductance calcium-activated potassium (SK) channels, with a high selectivity for SK3 and SK2 subtypes over SK1.[1][2] It acts by increasing the apparent sensitivity of these channels to intracellular calcium (Ca^{2+}), leading to channel activation at lower calcium concentrations than would normally be required.[1][3] This modulation results in an increase in potassium efflux, which can hyperpolarize the cell membrane and reduce neuronal excitability.

Q2: What are the recommended starting concentrations for in vitro experiments?

© 2026 BenchChem. All rights reserved.

A2: For in vitro electrophysiology experiments, a concentration range of 0.01 µM to 10 µM is a good starting point for generating a dose-response curve.[1][3] The half-maximal effective concentration (EC_{50}) for human SK3 (hSK3) is approximately 0.14 µM, and for human SK2 (hSK2) it is around 1.6-1.8 µM.[1][3] For cell-based assays investigating downstream effects, a concentration of 1 µM is often used to achieve significant modulation of SK2 and SK3 channels.[1][3]

Q3: How does **NS13001** affect the calcium sensitivity of SK channels?

A3: **NS13001** causes a leftward shift in the Ca^{2+}-activation curve for SK2 and SK3 channels.[1][3] For example, in the presence of 1 µM **NS13001**, the EC_{50} for Ca^{2+} activation of hSK3 channels shifts from approximately 0.42 µM to 0.11 µM.[1][3] A similar, though less pronounced, shift is observed for hSK2 channels.[1][3]

Q4: What is the selectivity profile of **NS13001**?

A4: **NS13001** exhibits marked selectivity for SK3 and SK2 channels over SK1 channels (SK3 > SK2 >>> SK1).[1][3] Concentrations that potently activate SK2 and SK3 have a negligible effect on SK1 channels.[1] It is also inactive on intermediate-conductance (IK) calcium-activated potassium channels.[1][4]

Q5: What dosage has been used in preclinical animal models?

A5: In a mouse model of spinocerebellar ataxia type 2 (SCA2), **NS13001** was administered orally at a dose of 30 mg/kg daily.[1][5] This dosage was found to improve motor performance and alleviate neuropathological phenotypes.[1][5][6]

Troubleshooting Guide

© 2026 BenchChem. All rights reserved.

Issue	Potential Cause	Recommended Solution
No observable effect of NS13001	Low expression of SK2/SK3 channels in the experimental system.	Verify the expression of SK2 and SK3 channels in your cell line or tissue preparation using techniques like qPCR, Western blot, or immunohistochemistry. Consider using a system known to express these channels, such as HEK293 cells stably transfected with hSK2 or hSK3.[1]
Suboptimal intracellular Ca^{2+} concentration.	The modulatory effect of NS13001 is dependent on the presence of intracellular Ca^{2+}. Ensure your experimental buffer contains an appropriate concentration of free Ca^{2+} (e.g., 0.2 µM) to observe potentiation.[1][3] At very high, saturating Ca^{2+} levels (e.g., 10 µM), the effect of NS13001 may be diminished or even slightly inhibitory.[1]	
Degradation of the compound.	Prepare fresh stock solutions of NS13001 in a suitable solvent (e.g., DMSO) and store them appropriately. Avoid repeated freeze-thaw cycles.	
High variability in results	Inconsistent intracellular Ca^{2+} levels.	Use a calcium buffer (e.g., EGTA) to maintain a stable intracellular Ca^{2+} concentration during experiments, particularly in electrophysiology studies.[1]

© 2026 BenchChem. All rights reserved.

Differences in SK channel subtype expression.	Be aware that the relative expression of SK2 and SK3 can vary between cell types and tissues, which will influence the overall response to NS13001 due to its different potencies for these subtypes.	
Unexpected off-target effects	High concentration of NS13001 used.	While NS13001 is selective, very high concentrations may lead to off-target effects. Stick to the recommended concentration range based on its EC_{50} values. Perform control experiments to rule out non-specific effects.

Quantitative Data Summary

Table 1: In Vitro Potency and Efficacy of **NS13001** on Human SK Channels

Channel Subtype	EC_{50} (μM)	Hill Coefficient (nH)	Efficacy (% of max activation by 10 μM Ca^{2+})
hSK3	0.14	1.0	91%
hSK2	1.6 - 1.8	1.4	90%
hSK1	> 100	N/A	Marginal

Data compiled from inside-out patch-clamp experiments on HEK293 cells at a free Ca^{2+} concentration of 0.2 μM.[1][3]

Table 2: Effect of 1 μM **NS13001** on Ca^{2+} Sensitivity of Human SK Channels

© 2026 BenchChem. All rights reserved.

Channel Subtype	EC_{50} for Ca^{2+} (μM) - Control	EC_{50} for Ca^{2+} (μM) - With 1 μM NS13001
hSK3	0.42	0.11
hSK2	0.42	0.18
hSK1	0.42	0.36

[1][3]

Experimental Protocols

Protocol 1: Electrophysiological Characterization of **NS13001** using Inside-Out Patch-Clamp

- Cell Culture: Use HEK293 cells stably expressing either human SK1, SK2, or SK3 channels. Culture cells in Dulbecco's Modified Eagle's Medium (DMEM) supplemented with 10% fetal bovine serum and a selection antibiotic.
- Electrophysiology Setup:
  - Prepare borosilicate glass pipettes with a resistance of 2-4 MΩ when filled with pipette solution.
  - Pipette Solution (in mM): 140 KCl, 2 $MgCl_2$, 10 HEPES, pH 7.4.
  - Bath Solution (in mM): 140 KCl, 2 $MgCl_2$, 10 HEPES, and a Ca^{2+}-EGTA buffer system to achieve the desired free Ca^{2+} concentration (e.g., 0.2 μM).
- Recording:
  - Establish a gigaseal on a single cell and excise an inside-out patch.
  - Hold the membrane potential at a negative value (e.g., -75 mV) to record inward K^+ currents.
  - Apply the bath solution containing the baseline Ca^{2+} concentration to the intracellular face of the patch.

© 2026 BenchChem. All rights reserved.

- Apply increasing concentrations of **NS13001** (e.g., 0.001 µM to 10 µM) in the same Ca^{2+}-containing bath solution.
- At the end of each experiment, apply a saturating concentration of Ca^{2+} (10 µM) to determine the maximal current for normalization.

- Data Analysis:
  - Normalize the current at each **NS13001** concentration to the maximal current elicited by 10 µM Ca^{2+}.
  - Plot the normalized current as a function of **NS13001** concentration and fit the data to the Hill equation to determine the EC_{50} and Hill coefficient.

Visualizations

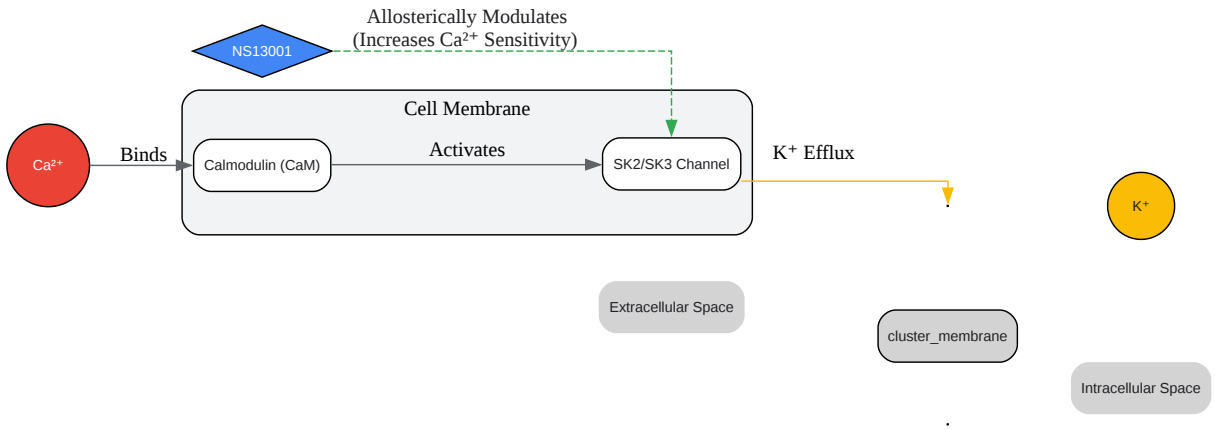

Click to download full resolution via product page

Caption: Mechanism of **NS13001** as a positive allosteric modulator of SK2/3 channels.

© 2026 BenchChem. All rights reserved.

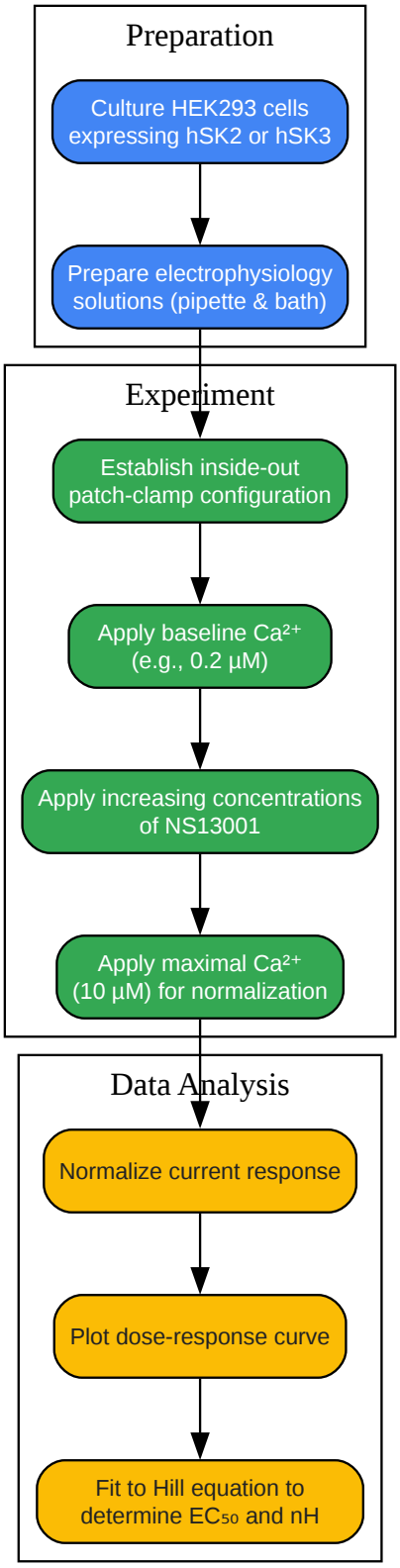

Click to download full resolution via product page

Caption: Workflow for determining **NS13001** potency using patch-clamp electrophysiology.

© 2026 BenchChem. All rights reserved.

Need Custom Synthesis?

BenchChem offers custom synthesis for rare earth carbides and specific isotopiclabeling.

Email: info@benchchem.com or Request Quote Online.

References

- 1. Novel selective positive modulator of calcium-activated potassium channels exerts beneficial effects in a mouse model of spinocerebellar ataxia type 2 - PMC [pmc.ncbi.nlm.nih.gov]
- 2. Pharmacological gating modulation of small- and intermediate-conductance Ca2+-activated K+ channels (KCa2.x and KCa3.1) - PMC [pmc.ncbi.nlm.nih.gov]
- 3. researchgate.net [researchgate.net]
- 4. New positive Ca2+-activated K+ channel gating modulators with selectivity for KCa3.1 - PubMed [pubmed.ncbi.nlm.nih.gov]
- 5. Selective positive modulator of calcium-activated potassium channels exerts beneficial effects in a mouse model of spinocerebellar ataxia type 2 - PubMed [pubmed.ncbi.nlm.nih.gov]
- 6. Disrupted Calcium Signaling in Animal Models of Human Spinocerebellar Ataxia (SCA) [mdpi.com]
- To cite this document: BenchChem. [NS13001 Technical Support Center: Optimizing Concentration for Maximal Efficacy]. BenchChem, [2026]. [Online PDF]. Available at: [https://www.benchchem.com/product/b2864711/docs#ns13001-technical-support-center-optimizing-concentration-for-maximal-efficacy]

Disclaimer & Data Validity:

The information provided in this document is for Research Use Only (RUO) and is strictly not intended for diagnostic or therapeutic procedures. While BenchChem strives to provide accurate protocols, we make no warranties, express or implied, regarding the fitness of this product for every specific experimental setup.

Technical Support: The protocols provided are for reference purposes. Unsure if this reagent suits your experiment?

Need Industrial/Bulk Grade? Request Custom Synthesis Quote

BenchChem

Our mission is to be the trusted global source of essential and advanced chemicals, empowering scientists and researchers to drive progress in science and industry.

Contact

Address: 3281 E Guasti Rd

Ontario, CA 91761, United States

Phone: (601) 213-4426

Email: info@benchchem.com

Contact our Ph.D. Support Team for a compatibility check

© 2026 BenchChem. All rights reserved.