Part 1: The Experimental Workflow: From Crystal to Structure

Author: BenchChem Technical Support Team. **Date**: March 2026

Compound of Interest		
Compound Name:	*1-Ethyl-N-isobutyl-4-nitro-1H-pyrazol-3-amine*	
CAS No.:	*1429418-05-2*	
Cat. No.:	*B2853970*	*Get Quote*

The journey from a powdered sample to a fully refined crystal structure is a meticulous process. Each step is critical for obtaining high-quality data that unambiguously defines the molecular geometry and its arrangement in the crystal lattice.[5][6]

The Foundational Step: Growing Diffraction-Quality Crystals

The single most critical and often challenging step is obtaining a suitable single crystal.[5][7] An ideal crystal for SCXRD should be well-formed, free of defects, and typically between 0.03 and 0.3 mm in its dimensions.[4] The underlying principle of crystal growth is to bring a solution of the compound to a state of supersaturation under conditions that favor slow, ordered precipitation over rapid, amorphous crashing.

Common Crystallization Protocols for Pyrazole Derivatives:

- Slow Evaporation: This is the most common and straightforward technique.
  - Dissolve the 3-amino-4-nitropyrazole compound in a suitable solvent (e.g., ethanol, methanol, ethyl acetate, or a mixture) to near saturation at room temperature.
  - Loosely cap the vial to allow the solvent to evaporate slowly over several days to weeks.

© 2026 BenchChem. All rights reserved.

- Monitor periodically for the formation of single crystals.

- Solvent/Anti-Solvent Diffusion: This method is effective for compounds that are highly soluble in one solvent but insoluble in another.
  - Dissolve the compound in a "good" solvent (e.g., acetone).
  - Carefully layer a less dense, miscible "anti-solvent" (e.g., hexane) on top of this solution.
  - Alternatively, place the vial of the compound's solution inside a larger, sealed chamber containing the anti-solvent. The vapor of the anti-solvent will slowly diffuse into the primary solution, reducing the compound's solubility and inducing crystallization at the interface.

The choice of solvent is crucial and often determined empirically. The goal is to find a system where the compound has moderate solubility, as this promotes the slow, ordered growth necessary for a high-quality crystal lattice.

Data Acquisition: The Diffraction Experiment

Once a suitable crystal is mounted, the X-ray diffraction experiment is performed. Modern diffractometers automate much of this process.

Step-by-Step Data Collection Protocol:

- Crystal Mounting: A selected crystal is carefully mounted on a glass fiber or a loop using a minimal amount of non-diffracting oil or epoxy.[4]

- Temperature Control: The mounted crystal is placed in a stream of cold nitrogen gas, typically at a stable temperature around 100 K.[8] This cryogenic cooling minimizes thermal vibrations of the atoms, leading to sharper diffraction spots and a higher-resolution structure. It also protects potentially sensitive samples from radiation damage.

- Data Collection Strategy: The instrument, equipped with an X-ray source (commonly Molybdenum or Copper) and a detector, collects a series of diffraction images.[4] The crystal is rotated through a range of angles (e.g., using ω-scans) to capture the diffraction pattern from all possible crystallographic planes.[8]

© 2026 BenchChem. All rights reserved.

- Data Processing: The collected images are processed using specialized software (e.g., SAINT). This step involves integrating the intensities of the diffraction spots and applying corrections for factors like absorption (e.g., using SADABS).[8] The output is a file containing a list of unique reflections and their intensities.

© 2026 BenchChem. All rights reserved.

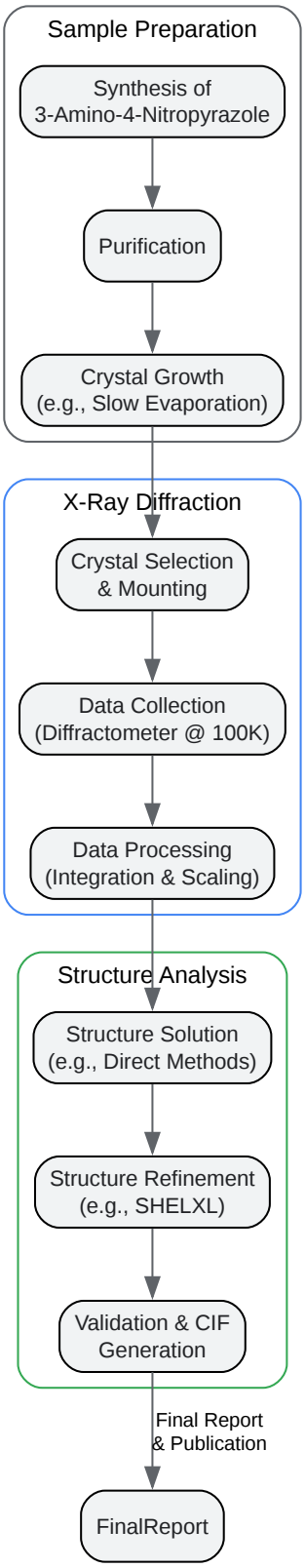

Click to download full resolution via product page

Caption: Experimental workflow for single-crystal X-ray analysis.

© 2026 BenchChem. All rights reserved.

Structure Solution and Refinement

This phase translates the raw diffraction data into a 3D atomic model.

- Structure Solution: The primary challenge is solving the "phase problem," as detectors only measure intensity, not the phase of the X-ray waves.[5] For small molecules like pyrazoles, this is typically achieved using "direct methods," where statistical relationships between intensities are used to derive initial phase estimates.

- Structure Refinement: The initial atomic model is then refined using a least-squares process (e.g., with the SHELXL program).[8] This iterative process adjusts atomic positions, and thermal parameters to improve the agreement between the calculated diffraction pattern (from the model) and the experimentally observed data. The quality of the final structure is assessed by metrics like the R1 value, which should ideally be below 0.05 for a well-refined structure.

Part 2: Comparative Structural Analysis of Pyrazole Derivatives

While a direct comparative study of multiple 3-amino-4-nitropyrazole crystal structures is not available in a single publication, we can construct a valuable comparison by examining the crystallographic data of closely related aminopyrazole and nitropyrazole compounds. This approach allows us to understand how different substituents and packing forces influence the core pyrazole geometry.

The analysis of a crystal structure provides a wealth of information, from the precise bond lengths and angles within the molecule to the intricate network of intermolecular interactions that dictate the crystal packing.[3]

Key Crystallographic Parameters: A Comparative Table

The following table summarizes key crystallographic data for several pyrazole derivatives, providing a basis for comparison.

© 2026 BenchChem. All rights reserved.

Parameter	Compound 1	Compound 2	Compound 3
Name	3-(4-Cyano-3-nitro-1H-pyrazol-5-yl)-4-nitrofurazan	4-(1,3-Diphenyl-4,5-dihydro-1H-pyrazol-5-yl)-1,3-diphenyl-1H-pyrazole	4-Iodo-1H-pyrazole
Empirical Formula	$C_6HN_7O_5$	$C_{30}H_{24}N_4$	$C_3H_3IN_2$
Crystal System	Orthorhombic	Monoclinic	Monoclinic
Space Group	Pbca	$P2_1/c$	$P2_1/c$
a (Å)	11.9776(7)	10.7841(5)	7.957(3)
b (Å)	11.9751(7)	11.0582(6)	5.568(2)
c (Å)	25.9920(15)	21.4820(9)	14.079(5)
β (°)	90	113.359(2)	102.34(2)
Volume (Å^3)	3728.1(4)	2351.82(19)	610.1(4)
Calculated Density (g/cm^3)	1.790	-	-
R-factor (R1)	0.0394	0.043	-
Data Source	[8]	[1]	[9]

Note: Data for a direct 3-amino-4-nitropyrazole was not available. The compounds listed are representative of nitropyrazoles and substituted pyrazoles to illustrate the type of data generated.

Analysis of Intermolecular Interactions and Crystal Packing

The arrangement of molecules in the crystal, known as crystal packing, is governed by non-covalent interactions such as hydrogen bonds, π-π stacking, and van der Waals forces. For 3-amino-4-nitropyrazoles, the amino ($-NH_2$) group is a strong hydrogen bond donor, while the nitro ($-NO_2$) group and the pyrazole nitrogen atoms are hydrogen bond acceptors.[9][10]

© 2026 BenchChem. All rights reserved.

These interactions are fundamental to the material's bulk properties, including density, stability, and, in the case of energetic materials, sensitivity. For example, studies on halogenated pyrazoles show that different substituents lead to distinct hydrogen-bonding motifs, such as catemers (chains) or trimers, which significantly alters their crystal packing.[9] A comparative analysis of the crystal packing of a nitro-substituted pyrazole versus a cyano-substituted analog revealed that the nitro group's ability to participate in intermolecular bonding leads to a denser and more tightly packed crystal structure.[8]

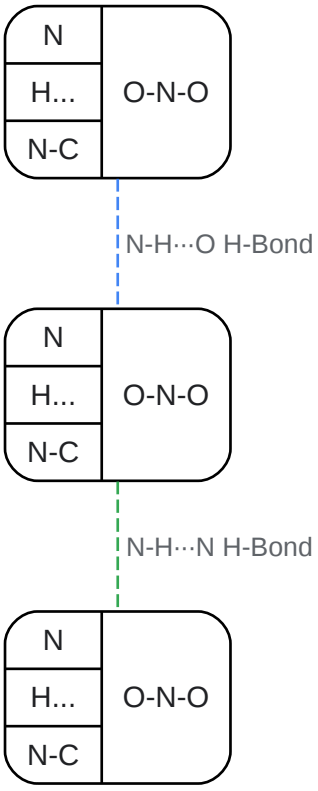

Click to download full resolution via product page

Caption: Common hydrogen bonding motifs in amino-nitropyrazoles.

Conclusion

Single-crystal X-ray diffraction is an indispensable tool for the structural characterization of 3-amino-4-nitropyrazoles. It provides unequivocal data on molecular geometry, conformation, and the subtle interplay of intermolecular forces that dictate the solid-state architecture. By comparing the structural parameters of new derivatives to those of known compounds, researchers can establish structure-property relationships, guiding the rational design of new

© 2026 BenchChem. All rights reserved.

molecules for applications in drug development and materials science. The protocols and comparative framework presented here offer a robust starting point for scientists engaged in the synthesis and analysis of these important heterocyclic compounds.

References

- Title: Synthesis and Crystal Structure of 3-(4-Cyano-3-nitro-1H-pyrazol-5-yl)-4-nitrofurazan: Comparison of the Influence of the NO2 and CN Groups on Crystal Packing and Density. Source: MDPI URL:[Link]
- Title: COMPARATIVE STRUCTURAL STUDIES OF 4-DIAZOPYRAZOLE DERIVATIVES BY X-RAY DIFFRACTION AND THEORETICAL INVESTIGATION Source: HETEROCYCLES, Vol. 65, No. 11, 2005 URL:[Link]
- Title: Comparative Structural Studies of 4-Diazopyrazole Derivatives by X-Ray Diffraction and Theoretical Investigation Source: ResearchGate URL:[Link]
- Title: Services: Single Crystal X-Ray Diffraction Source: University of Bern URL:[Link]
- Title: Recent Advances in Synthesis and Properties of Nitrated-Pyrazoles Based Energetic Compounds Source: National Center for Biotechnology Information (PMC) URL:[Link]
- Title: Structure analysis of a phenylpyrazole carboxylic acid derivative crystallizing with three molecules in the asymmetric unit (Z′ = 3) using X-ray powder diffraction Source: Cambridge University Press & Assessment URL:[Link]
- Title: Results for "Single Crystal X-ray Diffraction" Source: Springer Nature Experiments URL:[Link]
- Title: Completion of Crystallographic Data for the Series of 4-Halogenated-1H-pyrazoles: Crystal Structure Determination of 4-Iodo-1H-pyrazole and Spectroscopic Comparison Source: MDPI URL:[Link]
- Title: What Is Single-Crystal X-ray Diffraction (XRD) and How Does It Work? Source: CD ComputaBio URL:[Link]

© 2026 BenchChem. All rights reserved.

- Title: A Computational Study of the NMR Chemical Shifts of Polynitropyrazoles Source: National Center for Biotechnology Information (PMC) URL:[Link]
- Title: The Incorporation of a Single-Crystal X-ray Diffraction Experiment into the Undergraduate Physical Chemistry Laboratory Source: Journal of Chemical Education URL: [Link]
- Title: How to grow crystals for X-ray crystallography Source: International Union of Crystallography URL:[Link]
- Title: Nitropyrazoles (review) Source: ResearchGate URL:[Link]
- Title: ChemInform Abstract: Nitropyrazoles. Part 5. Synthesis of Substituted 3-Nitro-4-R-pyrazoles (II)-(VI), (VIII), (IX) from 3-Amino-4-pyrazolecarbonitrile (I). Source: ResearchGate URL:[Link]
- Title: Crystal structure of 3-amino-N′-hydroxy-1H-pyrazole-4-carboximidamide, C4H7N5O Source: De Gruyter URL:[Link]
- Title: Recent developments in aminopyrazole chemistry Source: ARKIVOC URL:[Link]

Need Custom Synthesis?

BenchChem offers custom synthesis for rare earth carbides and specific isotopiclabeling.

Email: info@benchchem.com or Request Quote Online.

Sources

- 1. pdf.benchchem.com [pdf.benchchem.com]
- 2. arkat-usa.org [arkat-usa.org]
- 3. Services: Single Crystal X-Ray Diffraction - Department of Chemistry, Biochemistry and Pharmaceutical Sciences [dcbp.unibe.ch]
- 4. creative-biostructure.com [creative-biostructure.com]
- 5. Results for "Single Crystal X-ray Diffraction" | Springer Nature Experiments [experiments.springernature.com]

© 2026 BenchChem. All rights reserved.

- 6. pubs.acs.org [pubs.acs.org]
- 7. journals.iucr.org [journals.iucr.org]
- 8. mdpi.com [mdpi.com]
- 9. Completion of Crystallographic Data for the Series of 4-Halogenated-1H-pyrazoles: Crystal Structure Determination of 4-Iodo-1H-pyrazole and Spectroscopic Comparison [mdpi.com]
- 10. A Computational Study of the NMR Chemical Shifts of Polynitropyrazoles - PMC [pmc.ncbi.nlm.nih.gov]

- To cite this document: BenchChem. [Part 1: The Experimental Workflow: From Crystal to Structure]. BenchChem, [2026]. [Online PDF]. Available at: [https://www.benchchem.com/product/b2853970#x-ray-crystal-structure-analysis-of-3-amino-4-nitropyrazoles]

Disclaimer & Data Validity:

The information provided in this document is for Research Use Only (RUO) and is strictly not intended for diagnostic or therapeutic procedures. While BenchChem strives to provide accurate protocols, we make no warranties, express or implied, regarding the fitness of this product for every specific experimental setup.

Technical Support: The protocols provided are for reference purposes. Unsure if this reagent suits your experiment? [Contact our Ph.D. Support Team for a compatibility check]

Need Industrial/Bulk Grade? Request Custom Synthesis Quote

BenchChem

Our mission is to be the trusted global source of essential and advanced chemicals, empowering scientists and researchers to drive progress in science and industry.

Contact

Address: 3281 E Guasti Rd

Ontario, CA 91761, United States

Phone: (601) 213-4426

Email: info@benchchem.com

© 2026 BenchChem. All rights reserved.