Application Note: Preparation of -Keto Acetals from Furan Derivatives

Author: BenchChem Technical Support Team. **Date**: April 2026

Compound of Interest	
Compound Name:	*2,2-Diethoxy-1-(furan-2-yl)ethan-1-one*
CAS No.:	*1402458-55-2*
Cat. No.:	*B2824620*

Get Quote

-Keto Acetals

Introduction & Strategic Overview

-Keto acetals (

) are privileged structural motifs in medicinal chemistry.[1] They serve as masked 1,2-dicarbonyls (glyoxals), offering a controlled reactivity profile that allows for the selective functionalization of the ketone moiety while protecting the aldehyde. When attached to furan rings, these motifs are critical intermediates for synthesizing complex heterocycles, chiral auxiliaries, and bioactive natural products.[2]

While furan rings are susceptible to oxidative ring opening (yielding 1,4-dicarbonyls), the synthesis of

-keto acetals typically involves the functionalization of the furan side-chain rather than the cleavage of the heteroaromatic core.

Core Synthetic Strategies

We define three primary methodologies based on the starting furan derivative:

© 2026 BenchChem. All rights reserved.

- Nucleophilic Acylation (Protocol A): Reaction of metallated furans with

  -dialkoxy Weinreb amides.

- Electrochemical Oxidation (Protocol B): Green oxidative alkoxylation of 2-ethynylfurans.

- Oxidative Functionalization (Protocol C): Classical oxidation of 2-acetylfurans.

Strategic Decision Map (Graphviz)

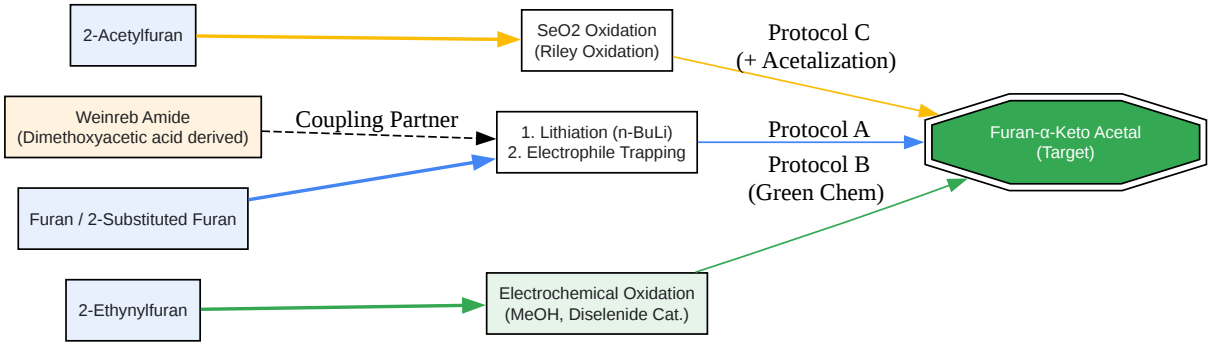

Click to download full resolution via product page

Caption: Strategic workflows for accessing furan-functionalized

-keto acetals. Protocol A offers modularity; Protocol B offers sustainability; Protocol C offers scalability.

Protocol A: Modular Synthesis via Weinreb Amides

Best for: Late-stage functionalization, high precision, and complex furan substrates.
Mechanism: Nucleophilic addition of lithiated furan to a stable amide electrophile.

Mechanistic Insight

Direct reaction of Grignard or organolithium reagents with

© 2026 BenchChem. All rights reserved.

-dialkoxy esters often leads to over-addition (forming tertiary alcohols). The use of Weinreb amides (N-methoxy-N-methylamides) prevents this by forming a stable tetrahedral chelate intermediate that only collapses to the ketone upon acidic quench.

Experimental Procedure

Step 1: Preparation of the Weinreb Amide Electrophile

Reagent: 2,2-Dimethoxy-N-methoxy-N-methylacetamide.

- Dissolution: Dissolve 2,2-dimethoxyacetic acid (10 mmol) in anhydrous DCM (40 mL).
- Activation: Cool to 0°C. Add Triethylamine (3.0 eq) followed by Triphosgene (0.5 eq) or EDC·HCl (1.2 eq). Stir for 30 min.
- Amidation: Add N,O-dimethylhydroxylamine hydrochloride (1.1 eq).
- Reaction: Warm to Room Temperature (RT) and stir for 2 hours.
- Workup: Quench with sat.

  . Extract with DCM. Wash organic layer with brine, dry over

  , and concentrate.
- Purification: Distillation or flash chromatography (Hex/EtOAc).[2] Yield typically >85%.[3][4][5]

Step 2: Coupling with Furan

- Lithiation: In a flame-dried flask under Argon, dissolve Furan (1.2 eq) in anhydrous THF (5 mL/mmol).
- Cooling: Cool to -78°C.
- Deprotonation: Add

  -BuLi (1.2 eq, 2.5 M in hexanes) dropwise. Stir at -78°C for 30 min, then 0°C for 30 min to ensure formation of 2-lithiofuran.

© 2026 BenchChem. All rights reserved.

- Coupling: Cool back to -78°C. Add the Weinreb Amide (from Step 1, 1.0 eq) dissolved in THF dropwise.
- Completion: Stir at -78°C for 1 hour, then allow to warm to 0°C over 1 hour.
- Quench: Pour into cold sat.

  solution.
- Isolation: Extract with EtOAc (3x). Dry organics over

  .[2]
- Result: The product is the 2-(2,2-dimethoxyacetyl)furan.

Data Summary:

Parameter	Condition	Note

| Temperature | -78°C

0°C | Critical to prevent decomposition of lithiofuran. | | Stoichiometry | 1.2 : 1.0 (Furan:Amide) | Slight excess of nucleophile ensures conversion. | | Yield | 85-95% | High fidelity reaction. |

Protocol B: Electrochemical Oxidative Alkoxylation

Best for: "Green" chemistry compliance, avoiding toxic oxidants, and converting alkynyl furans.
Reference: Adapted from J. Org.[6][7][8] Chem. 2022, 87, 4912–4917.[6]

Mechanistic Insight

This protocol utilizes an organoselenium catalyst which is electrochemically oxidized at the anode to a radical cation or electrophilic species. This activates the alkyne triple bond of 2-ethynylfuran towards nucleophilic attack by methanol, forming the

-keto acetal in a single pot without metallic oxidants.

Experimental Workflow (Graphviz)

© 2026 BenchChem. All rights reserved.

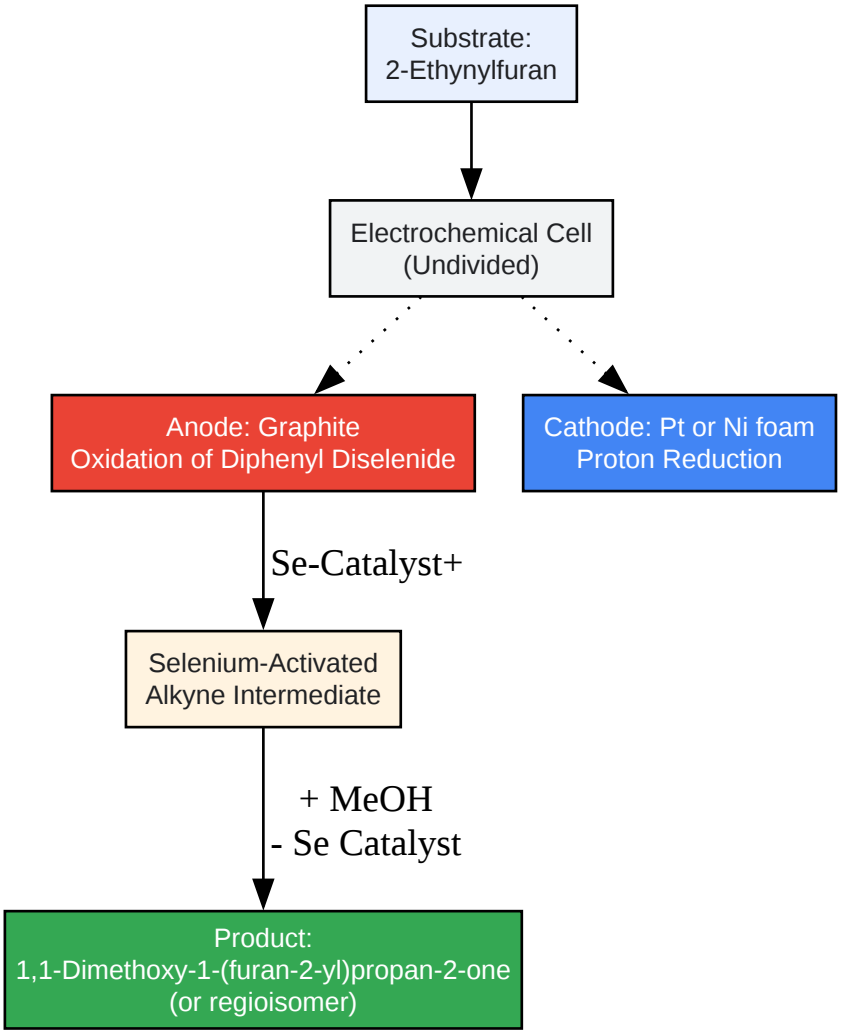

Click to download full resolution via product page

Caption: Electrochemical cycle for the conversion of ethynylfuran to

-keto acetals.

Protocol

- Setup: Use an undivided cell (beaker type) with a Graphite anode and Platinum (Pt) plate or Nickel foam cathode.
- Electrolyte: Dissolve 2-ethynylfuran (0.5 mmol) in MeOH (10 mL).
- Additives: Add Diphenyl Diselenide ((

© 2026 BenchChem. All rights reserved.

, 5 mol%) as the redox mediator. Add

or

(0.1 M) as supporting electrolyte.

- Electrolysis: Constant current (CCE) at 10 mA (approx. 3-4 F/mol) at Room Temperature.
- Monitoring: Monitor by TLC until alkyne is consumed (approx. 3-5 hours).
- Workup: Evaporate MeOH. Resuspend in water/ether. Extract.
- Purification: Silica gel chromatography.

Note: This reaction is highly regioselective.[7] For terminal alkynes, the internal carbon typically becomes the ketone and the terminal carbon becomes the acetal, or vice versa depending on the specific electronic bias of the furan. For 2-ethynylfuran, the polarization usually favors the formation of 1,1-dimethoxy-1-(furan-2-yl)propan-2-one (ketone adjacent to furan is less favored if steric/electronic factors dominate, but standard oxidation of aryl alkynes often gives

-keto acetals). Validation required for specific regiochemistry.

Protocol C: Classical Oxidation of 2-Acetylfuran

Best for: Large-scale preparation using readily available starting materials.[7]

Mechanistic Insight

Selenium dioxide (

) selectively oxidizes the

-methyl group of methyl ketones to an aldehyde, forming a glyoxal (1,2-dicarbonyl). The aldehyde is then selectively protected as an acetal due to its higher electrophilicity compared to the ketone.

Protocol

- Oxidation:
  - Dissolve 2-acetylfuran (10 mmol) in 1,4-dioxane/water (20 mL, 9:1 ratio).

© 2026 BenchChem. All rights reserved.

- Add

  (1.1 eq).
- Reflux for 4 hours. The solution will turn black (precipitation of Se metal).
- Filter hot through Celite to remove Selenium.
- Concentrate filtrate to obtain crude (furan-2-yl)glyoxal (often isolated as a hydrate).

- Acetalization:
  - Dissolve the crude glyoxal in anhydrous MeOH (30 mL).
  - Add Trimethyl Orthoformate (HC(OMe)3, 3.0 eq).
  - Add catalyst:

    -Toluenesulfonic acid (

    -TsOH, 1 mol%) or Amberlyst-15.
  - Stir at RT for 12 hours.
- Workup:
  - Neutralize with

    or solid

    .
  - Concentrate and purify by column chromatography (Hex/EtOAc 9:1).
  - Product: 2,2-dimethoxy-1-(furan-2-yl)ethanone.

Troubleshooting & Optimization

© 2026 BenchChem. All rights reserved.

Issue	Probable Cause	Corrective Action
Low Yield (Protocol A)	Moisture in lithiation step.	Ensure THF is distilled/dried. Use fresh -BuLi. Titrate -BuLi before use.
Over-addition (Protocol A)	Amide collapse before quench.	Maintain temperature strictly at -78°C during addition.
Incomplete Oxidation (Protocol B)	Electrode passivation.	Reverse polarity briefly or polish electrodes. Increase electrolyte conc.
Regioisomer Mix (Protocol B)	Electronic bias of furan.[9]	Modify solvent (e.g., MeOH/MeCN mix) or switch to Protocol A for strictly defined regiochemistry.
Se Residue (Protocol C)	Inefficient filtration.	Filter through a double pad of Celite/activated charcoal.

Safety Considerations

- Furan Derivatives: Many are volatile and potentially carcinogenic. Work in a fume hood.
- n-Butyllithium: Pyrophoric. Handle under inert atmosphere (Argon/Nitrogen).
- Selenium Dioxide: Highly toxic and an environmental hazard. Dispose of selenium waste separately as hazardous heavy metal waste.
- Electrolysis: Generation of gas at the cathode requires ventilation to prevent explosive buildup.

References

- Ayala-Mata, F., et al.

© 2026 BenchChem. All rights reserved.

-Ketoacetals." Molecules, 2012, 17(12), 13864–13878.[5] Link[5]

- Ding, D., Xu, L., & Wei, Y. "The Synthesis of

  -Keto Acetals from Terminal Alkynes and Alcohols via Synergistic Interaction of Organoselenium Catalysis and Electrochemical Oxidation."[6] J. Org.[6][7][8] Chem., 2022, 87(7), 4912–4917.[6] Link

- Clauson-Kaas, N., et al. "Preparation of 2,5-dimethoxy-2,5-dihydrofuran."[2] Acta Chem. Scand., 1947, 1, 619. (Foundational reference for furan oxidation).

- BenchChem. "Ring-Opening Reactions of Furan for Organic Synthesis." Application Note. Link

Need Custom Synthesis?

BenchChem offers custom synthesis for rare earth carbides and specific isotopiclabeling.

Email: info@benchchem.com or Request Quote Online.

Sources

- 1. Efficient Preparation of α-Ketoacetals [mdpi.com]
- 2. pdf.benchchem.com [pdf.benchchem.com]
- 3. Regioselective Synthesis of Multisubstituted Furans via Metalloradical Cyclization of Alkynes with α-Diazocarbonyls: Construction of Functionalized α-Oligofurans - PMC [pmc.ncbi.nlm.nih.gov]
- 4. Dihydronaphthofurans: synthetic strategies and applications - RSC Advances (RSC Publishing) DOI:10.1039/C9RA09987E [pubs.rsc.org]
- 5. researchgate.net [researchgate.net]
- 6. The Synthesis of α-Keto Acetals from Terminal Alkynes and Alcohols via Synergistic Interaction of Organoselenium Catalysis and Electrochemical Oxidation [organic-chemistry.org]
- 7. Furan synthesis [organic-chemistry.org]
- 8. beilstein-journals.org [beilstein-journals.org]
- 9. pure.mpg.de [pure.mpg.de]

- To cite this document: BenchChem. [Application Note: Preparation of -Keto Acetals from Furan Derivatives]. BenchChem, [2026]. [Online PDF]. Available at: [https://www.benchchem.com/product/b2824620/docs#application-note-preparation-of-keto-acetals-from-furan-derivatives]

Disclaimer & Data Validity:

The information provided in this document is for Research Use Only (RUO) and is strictly not intended for diagnostic or therapeutic procedures. While BenchChem strives to provide accurate protocols, we make no warranties, express or implied, regarding the fitness of this product for every specific experimental setup.

Technical Support: The protocols provided are for reference purposes. Unsure if this reagent suits your experiment?

Need Industrial/Bulk Grade? Request Custom Synthesis Quote

BenchChem

Our mission is to be the trusted global source of essential and advanced chemicals, empowering scientists and researchers to drive progress in science and industry.

Contact

Address: 3281 E Guasti Rd

Ontario, CA 91761, United States

Phone: (601) 213-4426

Email: info@benchchem.com

Contact our Ph.D. Support Team for a compatibility check

© 2026 BenchChem. All rights reserved.