Mass Spectrometry Fragmentation Patterns of 1,4-Dimethylpyrazole Derivatives

Author: BenchChem Technical Support Team. **Date**: April 2026

Compound of Interest

Compound Name:	*(1,4-Dimethyl-1H-pyrazol-3-yl)boronic acid*
CAS No.:	*2246870-91-5*
Cat. No.:	*B2781076*

Get Quote

Content Type: Publish Comparison Guide Audience: Researchers, Analytical Chemists, Drug Development Professionals[1]

Executive Summary: The Regioisomer Challenge

In medicinal chemistry and agrochemical synthesis, the regioselectivity of pyrazole alkylation is a critical quality attribute.[1] The three primary isomers—1,4-dimethylpyrazole (1,4-DMP), 1,3-dimethylpyrazole (1,3-DMP), and 1,5-dimethylpyrazole (1,5-DMP)—possess identical molecular weights (MW 96.[1]13) and similar polarities, making differentiation challenging.

This guide establishes that 1,4-dimethylpyrazole is characterized by a dominant $[M-H]^+$ base peak at m/z 95, driven by the stability of the resulting methylene radical cation and the absence of steric strain ("ortho-effect") found in the 1,5-isomer.[1]

Fragmentation Mechanism of 1,4-Dimethylpyrazole

Unlike its isomers, 1,4-dimethylpyrazole lacks adjacent methyl substituents, allowing for a distinct fragmentation pathway dominated by hydrogen loss rather than methyl group ejection.

© 2026 BenchChem. All rights reserved.

[1]

Key Diagnostic Ions (EI, 70 eV)

The electron ionization (EI) spectrum of 1,4-dimethylpyrazole is defined by the following characteristic ions [1, 2]:

m/z	Ion Identity	Relative Abundance	Mechanistic Origin
96	M^+ (Molecular Ion)	~93%	Stable aromatic pyrazole ring.[1]
95	$[M-H]^+$ (Base Peak)	100%	Loss of H[2]• from the N-methyl or C-methyl group; stabilization via ring expansion or resonance.[1]
81	$[M-CH_3]^+$	<10%	Loss of methyl radical. Low abundance compared to 1,5-isomer.
54	$[C_3H_4N]^+$	~16%	Ring cleavage (Retro-Diels-Alder type fragmentation).[1]
42	$[C_2H_4N]^+$	~37%	Further fragmentation of the pyrazole ring (likely acetonitrile moiety).

Mechanistic Pathway (DOT Visualization)

The following diagram illustrates the primary fragmentation pathways for 1,4-dimethylpyrazole.

© 2026 BenchChem. All rights reserved.

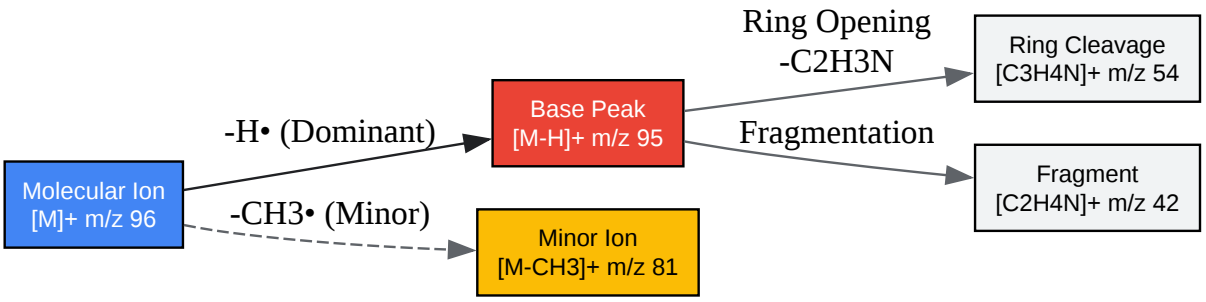

Click to download full resolution via product page

Caption: Primary EI-MS fragmentation pathway of 1,4-dimethylpyrazole showing the dominance of hydrogen loss (m/z 95) over methyl loss.[1]

Comparative Analysis: 1,4-DMP vs. 1,3-DMP vs. 1,5-DMP

Differentiation relies on the "Ortho Effect" (Proximity Effect).[1] In pyrazoles, substituents at positions 1 and 5 are spatially adjacent, leading to steric crowding and unique fragmentation channels not present in the 1,3- or 1,4-isomers [3, 4].[1]

The "Ortho Effect" Discriminator[1]

- 1,5-Dimethylpyrazole: The N1-Methyl and C5-Methyl are adjacent.[1] This steric strain weakens the bonds, often enhancing the $[M-CH_3]^+$ (m/z 81) peak relative to the $[M-H]^+$ peak compared to the 1,4-isomer.[1] The proximity also facilitates specific hydrogen transfers (ortho-effects) that can lead to unique rearrangement ions.

- 1,4-Dimethylpyrazole: The N1-Methyl and C4-Methyl are distant.[1] The molecule is sterically relaxed.[1] The loss of a hydrogen atom (likely from the N-methyl) forms a highly stable cation, making m/z 95 the overwhelming base peak.[1]

Comparison Table

© 2026 BenchChem. All rights reserved.

Feature	1,4-Dimethylpyrazole	1,5-Dimethylpyrazole	1,3-Dimethylpyrazole
Base Peak	m/z 95 ($[M-H]^+$)	m/z 95 or 96 (Variable)	m/z 95 or 96
m/z 81 Intensity	Low (<10%)	Elevated (Due to steric relief)	Low
Steric Strain	None (N1 & C4 separated)	High (N1 & C5 adjacent)	None (N1 & C3 separated)
GC Retention	Distinct (Boiling Point dependent)	Elutes after 1,3-isomer usually	Elutes before 1,5-isomer
Differentiation Key	High $[M-H]^+$ / Low $[M-CH_3]^+$	Higher $[M-CH_3]^+$ / $[M-H]^+$ ratio	Requires GC retention index

Diagnostic Workflow (DOT Visualization)

Use this logic gate to identify the specific isomer from an unknown sample.

© 2026 BenchChem. All rights reserved.

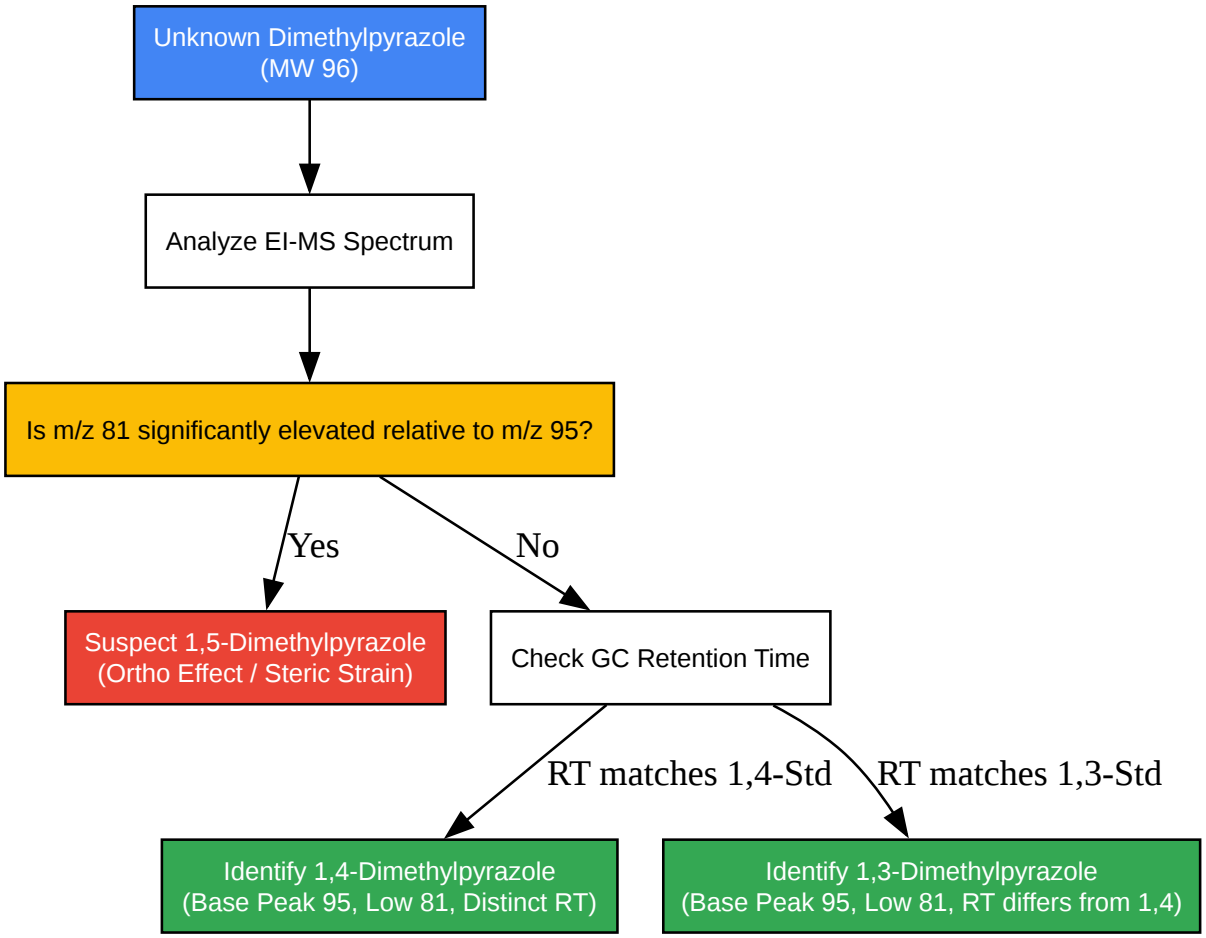

Click to download full resolution via product page

Caption: Decision tree for distinguishing dimethylpyrazole isomers combining MS spectral features and chromatographic retention.

Experimental Protocols (Self-Validating)

Sample Preparation for GC-MS

To ensure reproducible fragmentation, samples must be diluted to prevent ion source saturation which can distort isotope ratios.[1]

- Solvent: Methanol or Acetonitrile (HPLC Grade).
- Concentration: Prepare a 1 mg/mL stock, dilute to 10 µg/mL for injection.
- Vial: Silanized glass vials to prevent adsorption of basic pyrazoles.

© 2026 BenchChem. All rights reserved.

GC-MS Instrument Parameters (EI Mode)

- Column: 5% Phenyl-methylpolysiloxane (e.g., HP-5ms), 30m x 0.25mm ID.[1]
- Carrier Gas: Helium at 1.0 mL/min (Constant Flow).
- Inlet: Split mode (20:1), 250°C.
- Source Temp: 230°C.
- Ionization Energy:70 eV (Standard for library matching).[3]
- Scan Range: m/z 35–200.

LC-MS/MS Quantitation (MRM Mode)

For pharmacokinetic or trace analysis where isomer separation is achieved chromatographically [5]:

- Ionization: ESI Positive Mode.
- Precursor Ion: m/z 97.1 $[M+H]^+$.
- Quantifier Transition: m/z 97.1 → 56.2 (Collision Energy ~20-25 eV).
- Qualifier Transition: m/z 97.1 → 42.1 (Collision Energy ~30-35 eV).

References

- NIST Mass Spectrometry Data Center.Pyrazole, 1,4-dimethyl- Mass Spectrum.[1][4] NIST Chemistry WebBook, SRD 69.[1] Available at: [Link]
- PubChem.1,4-Dimethylpyrazole Compound Summary (CID 136836). National Library of Medicine. Available at: [Link]
- Rusak, V.V., et al.Extracting 1,3-dimethylpyrazole and 1,5-dimethylpyrazole from binary industrial mixtures.[1] Coke and Chemistry, 2015.[1][5] Available at: [Link]

© 2026 BenchChem. All rights reserved.

- Kuhn, B.L., et al.Trends for Pyrazole Fragmentation Determined by Gas Chromatography Coupled with Mass Spectrometry.[1][2] ResearchGate.[5] Available at: [Link]
- Byrne, M.P., et al.Quantification of 3,4-Dimethyl-1H-Pyrazole Using Ion-Pair LC–MS/MS.[1] Journal of AOAC International, 2022.[1] (Methodology adapted for 1,4-isomer). Available at: [Link]

Need Custom Synthesis?

BenchChem offers custom synthesis for rare earth carbides and specific isotopiclabeling.

Email: info@benchchem.com or Request Quote Online.

Sources

- 1. PTR-MS Principles - Kore Technology [kore.co.uk]
- 2. researchgate.net [researchgate.net]
- 3. Thieme E-Journals - Synthesis / Abstract [thieme-connect.de]
- 4. 1,4-Dimethylpyrazole | C5H8N2 | CID 136836 - PubChem [pubchem.ncbi.nlm.nih.gov]
- 5. researchgate.net [researchgate.net]
- To cite this document: BenchChem. [Mass Spectrometry Fragmentation Patterns of 1,4-Dimethylpyrazole Derivatives]. BenchChem, [2026]. [Online PDF]. Available at: [https://www.benchchem.com/product/b2781076/docs#mass-spectrometry-fragmentation-patterns-of-1-4-dimethylpyrazole-derivatives]

Disclaimer & Data Validity:

The information provided in this document is for Research Use Only (RUO) and is strictly not intended for diagnostic or therapeutic procedures. While BenchChem strives to provide accurate protocols, we make no warranties, express or implied, regarding the fitness of this product for every specific experimental setup.

Technical Support: The protocols provided are for reference purposes. Unsure if this reagent suits your experiment?

© 2026 BenchChem. All rights reserved.

Need Industrial/Bulk Grade? Request Custom Synthesis Quote

BenchChem

Our mission is to be the trusted global source of essential and advanced chemicals, empowering scientists and researchers to drive progress in science and industry.

Contact

Address: 3281 E Guasti Rd

Ontario, CA 91761, United States

Phone: (601) 213-4426

Email: info@benchchem.com

Contact our Ph.D. Support Team for a compatibility check

© 2026 BenchChem. All rights reserved.