Technical Guide: Solubility Profiling of 3,4-Dimethoxyphenyl Butenoate Derivatives

Author: BenchChem Technical Support Team. **Date**: May 2026

Compound of Interest

Compound Name:	*Ethyl 2-cyano-3-(3,4-dimethoxyphenyl)but-2-enoate*
CAS No.:	*15854-05-4*
Cat. No.:	*B2765981*

Get Quote

Executive Summary

The solubility profile of 3,4-dimethoxyphenyl butenoate derivatives is governed by a competitive interaction between lipophilicity-driven aggregation and hydrolytic degradation.[1] As lipophilic esters (Predicted LogP

2.5–3.5), these compounds typically exhibit BCS Class II behavior (Low Solubility, High Permeability).[1]

This guide provides a definitive workflow to decouple kinetic solubility (precipitation from DMSO) from thermodynamic solubility (equilibrium saturation), while strictly controlling for the ester's susceptibility to base-catalyzed hydrolysis.[1]

Part 1: Structural Analysis & Physicochemical Context[1]

The "Brick Dust" vs. "Grease Ball" Assessment

© 2026 BenchChem. All rights reserved.

Understanding the solid-state nature of the derivative is the first step in predicting solubility.

- The 3,4-Dimethoxy Moiety: The planar benzene ring with two methoxy groups facilitates strong

  -

  stacking and crystal packing.[1] This often results in "Brick Dust" behavior—high melting point solids where solubility is limited by the energy required to break the crystal lattice.

- The Butenoate Linker: The

  -unsaturated ester adds rigidity compared to saturated analogs.[1] While this conjugation stabilizes the molecule electronically, the ester bond remains a "soft spot" for nucleophilic attack (hydrolysis) in aqueous buffers.

Predicted Physicochemical Parameters

Based on structural fragment contribution (ClogP) and analog data (e.g., 1,4-dimethoxybenzene, ethyl cinnamate).[1]

Parameter	Approximate Range	Implication for Profiling
LogP (Octanol/Water)	2.5 – 3.5	High affinity for lipid bilayers; requires cosolvents for aqueous assays.[1]
Aqueous Solubility	< 100 g/mL (pH 7.[1]4)	Likely requires high-sensitivity detection (LC-MS/MS or UPLC-UV).[1]
pKa	Neutral (Molecule)	No ionization at physiological pH; solubility is pH-independent unless hydrolysis occurs.[1]
Hydrolysis Product pKa	~4.5 (Acid) / ~10 (Phenol)	Degradation products will be ionized, artificially inflating "apparent" solubility readings.[1]

© 2026 BenchChem. All rights reserved.

Part 2: Experimental Protocols

Kinetic Solubility Screening (High-Throughput)

Purpose: Rapidly estimate the concentration limit for biological assays (preventing "crashing out" during screening).[1] Method: DMSO "Spike" into Buffer.[1]

Protocol:

- Stock Prep: Prepare a 10 mM stock solution in 100% DMSO. Ensure complete dissolution (sonicate if necessary).[1]
- Stepwise Addition: Spike the DMSO stock into PBS (pH 7.4) to achieve final concentrations of 1, 10, 50, and 100

  M. Keep final DMSO concentration < 1% (v/v).
- Incubation: Shake for 90 minutes at 25°C.
- Detection: Measure light scattering via Nephelometry or UV-Vis absorption shift (300–400 nm range).[1]
- Readout: The "Kinetic Solubility Limit" is the concentration immediately preceding the onset of turbidity.[1]

> *Critical Insight: Kinetic solubility is almost always higher than thermodynamic solubility because the compound is in a metastable, supersaturated state.[1] Do not use this value for formulation stability.*

Thermodynamic Solubility (The Gold Standard)

Purpose: Determine the true equilibrium solubility for formulation and CMC (Chemistry, Manufacturing, and Controls). Method: Saturation Shake-Flask (Modified OECD Guideline

© 2026 BenchChem. All rights reserved.

105).[1]

Protocol:

- Supersaturation: Add excess solid compound (approx. 2–5 mg) to 1 mL of buffer (pH 1.2, 7.4) in a glass vial.
- Equilibration: Agitate at 25°C or 37°C for 24 to 48 hours.
  - Note: For esters, limit time to 24h to minimize hydrolysis artifacts.[1]
- Separation: Centrifuge at 10,000 rpm for 10 mins or filter using a PVDF membrane (0.22 m).
  - Pre-saturation Rule: Discard the first 200 L of filtrate to prevent drug loss due to filter adsorption.
- Quantification: Analyze the supernatant via HPLC-UV/Vis.

The Hydrolysis Trap (Quality Control)

Because these are esters, a "soluble" reading might actually be the soluble degradation product (3,4-dimethoxyphenol or butenoic acid).[1]

Validation Step: Run a chromatogram of the solubility filtrate.[1]

- Peak A (Parent): The actual solubility.
- Peak B/C (Hydrolysis Products): If these exist, your solubility data is compromised.[1]
- Correction: If degradation > 5%, perform the experiment at 4°C or use a shorter equilibration time (e.g., 4–6 hours).

Part 3: Visualization of Workflows

Diagram 1: Solubility Profiling Decision Tree

© 2026 BenchChem. All rights reserved.

This workflow illustrates the logical progression from solid material to validated solubility data, incorporating the critical stability check.

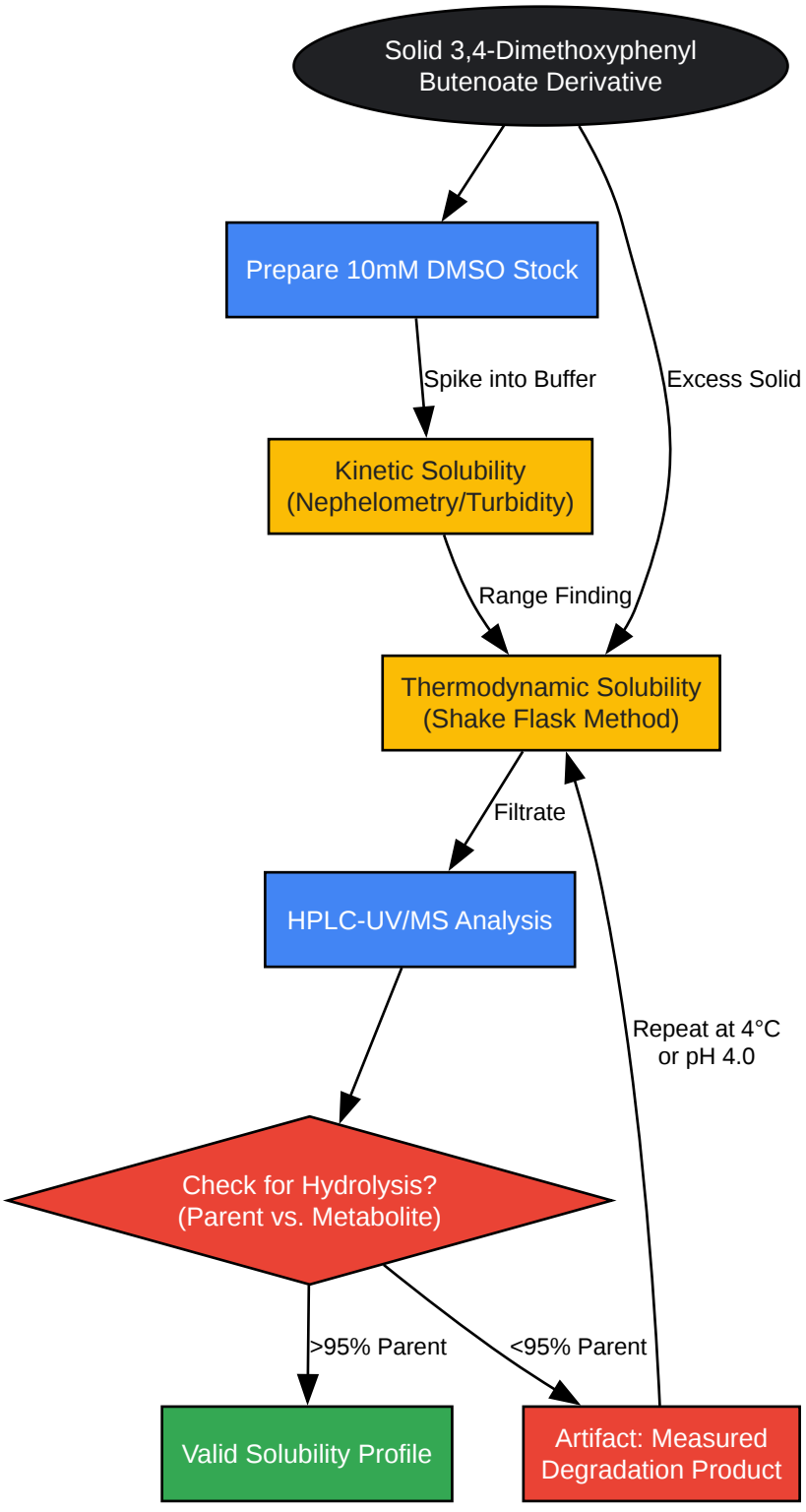

Click to download full resolution via product page

© 2026 BenchChem. All rights reserved.

Caption: Figure 1. Decision tree for distinguishing true solubility from hydrolytic degradation artifacts.

Diagram 2: Hydrolysis-Solubility Competition

This diagram details the specific chemical risks associated with the butenoate ester bond during aqueous profiling.[1]

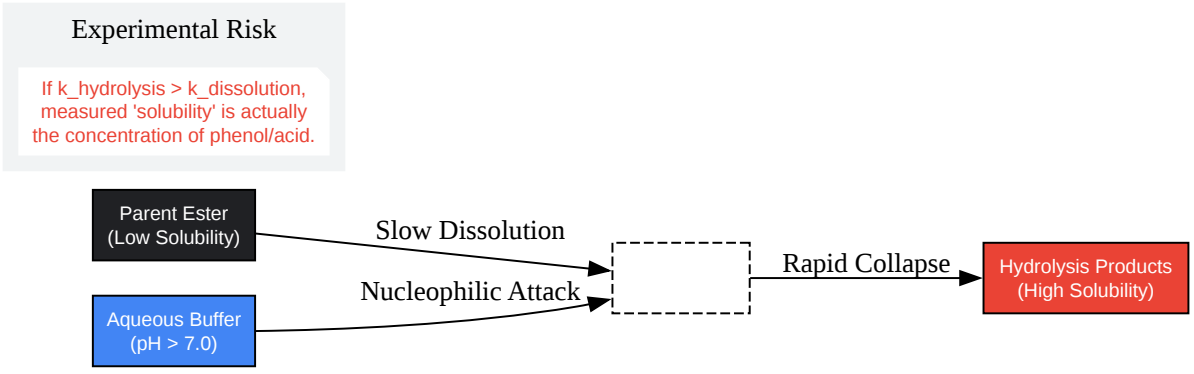

Click to download full resolution via product page

Caption: Figure 2. The kinetic competition between dissolution and degradation. High pH accelerates hydrolysis, falsifying solubility data.[1]

Part 4: Solubilization Strategies for Bioassays

If the intrinsic aqueous solubility is insufficient for efficacy studies (< 10

M), employ the following formulation strategies.

Cosolvent Systems

For in vitro assays, simple binary mixtures are often sufficient.[1]

- DMSO: Up to 0.1% - 0.5% is generally tolerated by cells; up to 5% for enzymatic assays.[1]
- PEG 400: A polyethylene glycol spacer.[1] Use 10–20% v/v in water to disrupt the water lattice and accommodate the lipophilic ester.

© 2026 BenchChem. All rights reserved.

Surfactants & Complexation

For in vivo (animal) studies, avoid high DMSO.[1]

- Cyclodextrins (HP-

  -CD): The hydrophobic cavity of hydroxypropyl-

  -cyclodextrin is ideal for the 3,4-dimethoxyphenyl ring.[1]

  - Protocol: Prepare 20% (w/v) HP-

    -CD in water.[1] Add excess drug, sonicate for 30 mins, filter.[1]

- Polysorbate 80 (Tween 80): Use at 0.1% – 1.0% to form micelles that encapsulate the ester. [1]

Part 5: Data Interpretation & Reporting[1]

When reporting solubility data for these derivatives, use the following table structure to ensure clarity and reproducibility.

Parameter	Experimental Condition	Value (Example)	Interpretation
Kinetic Solubility	PBS, pH 7.4, 2% DMSO, 90 min	45 M	Max concentration for screening assays.[1]
Thermodynamic Solubility	Water, pH 7.0, 24h Shake	12 g/mL	True equilibrium solubility.[1]
Thermodynamic Solubility	SGF (Simulated Gastric Fluid), pH 1.2	15 g/mL	Solubility in the stomach (likely stable).[1]
Stability Index	% Remaining after 24h (pH 7.4)	88%	WARNING: 12% degradation observed. [1]

© 2026 BenchChem. All rights reserved.

Final Recommendation

For 3,4-dimethoxyphenyl butenoate derivatives, pH-dependent stability is the variable that most often corrupts solubility data.[1] Always verify peak purity via HPLC. If the compound degrades at pH 7.4, determine solubility at pH 4.0–5.0 (where esters are generally most stable) and use a theoretical extrapolation for neutral pH.

References

- OECD Guidelines for the Testing of Chemicals, Section 1. (1995).[1] Test No. 105: Water Solubility.[1][2] Organization for Economic Cooperation and Development.[1][2] Link[1]
- Lipinski, C. A., et al. (2001).[1] Experimental and computational approaches to estimate solubility and permeability in drug discovery and development settings.[1] Advanced Drug Delivery Reviews.[1] Link
- Yalkowsky, S. H., & He, Y. (2003).[1] Handbook of Aqueous Solubility Data. CRC Press.[1][3] (Provides foundational data for benzenoid derivatives). Link
- PubChem Compound Summary. (2024). 1,4-Dimethoxybenzene (Analog Data).[1][4] National Center for Biotechnology Information.[1] Link[1]
- Bergström, C. A., et al. (2007).[1] Accuracy of calculated pH-dependent aqueous drug solubility. European Journal of Pharmaceutical Sciences.[1][5] Link

Need Custom Synthesis?

BenchChem offers custom synthesis for rare earth carbides and specific isotopiclabeling.

Email: info@benchchem.com or Request Quote Online.

Sources

- 1. 4-(3,4-Dimethoxyphenyl)butanoic acid | C12H16O4 | CID 323675 - PubChem [pubchem.ncbi.nlm.nih.gov]
- 2. filab.fr [filab.fr]
- 3. 1,4-Dimethoxybenzene | C8H10O2 | CID 9016 - PubChem [pubchem.ncbi.nlm.nih.gov]

- 4. 1,4-Dimethoxybenzene - Wikipedia [en.wikipedia.org]
- 5. jddtonline.info [jddtonline.info]
- To cite this document: BenchChem. [Technical Guide: Solubility Profiling of 3,4-Dimethoxyphenyl Butenoate Derivatives]. BenchChem, [2026]. [Online PDF]. Available at: [https://www.benchchem.com/product/b2765981/docs#technical-guide-solubility-profiling-of-3-4-dimethoxyphenyl-butenoate-derivatives]

Disclaimer & Data Validity:

The information provided in this document is for Research Use Only (RUO) and is strictly not intended for diagnostic or therapeutic procedures. While BenchChem strives to provide accurate protocols, we make no warranties, express or implied, regarding the fitness of this product for every specific experimental setup.

Technical Support: The protocols provided are for reference purposes. Unsure if this reagent suits your experiment?

Need Industrial/Bulk Grade? Request Custom Synthesis Quote

BenchChem

Our mission is to be the trusted global source of essential and advanced chemicals, empowering scientists and researchers to drive progress in science and industry.

Contact

Address: 3281 E Guasti Rd

Ontario, CA 91761, United States

Phone: (601) 213-4426

Email: info@benchchem.com

Contact our Ph.D. Support Team for a compatibility check

© 2026 BenchChem. All rights reserved.