Precision Functionalization of 1H-Pyrazole Nitrogen in Thiophene-Based Scaffolds

Author: BenchChem Technical Support Team. **Date**: April 2026

Compound of Interest

Compound Name:	*3-(3-chlorothiophen-2-yl)-5-methyl-1H-pyrazole*
CAS No.:	*1025025-95-9*
Cat. No.:	*B2665255*

Get Quote

Strategic Overview: The Thiophene-Pyrazole Challenge

The fusion or linkage of thiophene and pyrazole rings creates a privileged scaffold in medicinal chemistry, widely utilized in kinase inhibitors (e.g., Aurora, PLK1) and anti-inflammatory agents. [1] However, functionalizing the pyrazole nitrogen (

) in the presence of a thiophene ring presents a unique set of electronic and steric challenges that distinguish it from standard azole chemistry.

The Core Challenges

- Tautomeric Ambiguity: Unsubstituted pyrazoles exist in dynamic equilibrium between

  and

  tautomers. The substituent at position 3 (or 5) dictates the major tautomer, but alkylation often yields mixtures (

© 2026 BenchChem. All rights reserved.

vs.

regioisomers).[1]

- Thiophene Sensitivity: The thiophene ring is electron-rich and susceptible to oxidation or electrophilic aromatic substitution. Harsh alkylating conditions or strong oxidants (often used in copper catalysis) can degrade the thiophene core.
- Catalyst Poisoning: The sulfur atom in thiophene and the

  nitrogens of pyrazole are potent ligands that can sequester transition metals (Pd, Cu), killing catalytic cycles in cross-coupling reactions.

Mechanistic Logic

The

of the pyrazole

in these systems typically ranges from 13.5 to 14.5 (in DMSO). Successful functionalization relies on deprotonation to form the pyrazolyl anion, which is an ambident nucleophile.

- Kinetic Control (Sterics): Alkylation generally favors the less hindered nitrogen.
- Thermodynamic Control: Reversible conditions (high heat, weak bases) allow equilibration to the thermodynamically more stable isomer (often the one with the substituent adjacent to the electron-withdrawing group, or minimizing dipole repulsion).[1]

Decision Framework: Pathway Selection

The following decision tree illustrates the logic for selecting the optimal functionalization route based on the target moiety and substrate constraints.

© 2026 BenchChem. All rights reserved.

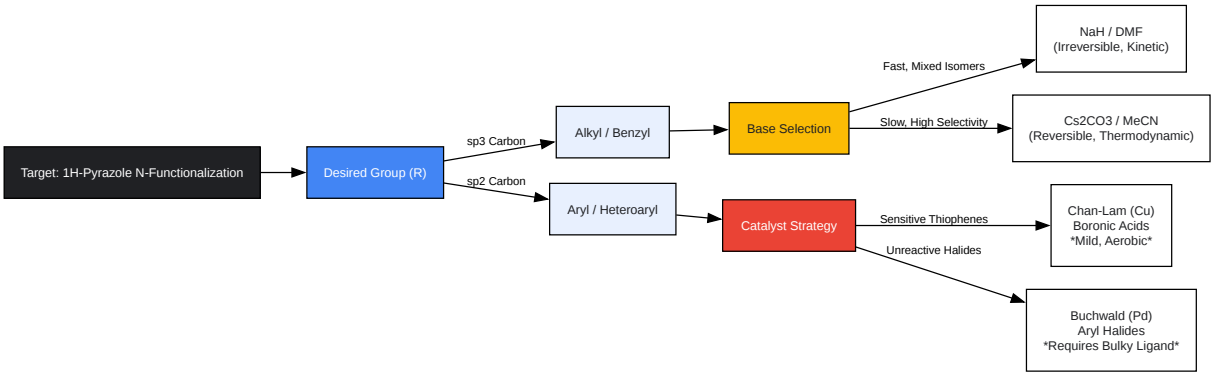

Click to download full resolution via product page

Figure 1: Strategic decision tree for selecting reaction conditions based on the desired substituent and substrate stability.[1]

Protocol A: Regioselective -Alkylation

Objective: Introduction of alkyl chains (e.g., methyl, ethyl, benzyl) with maximal regiocontrol.[1]

Rationale

Using Cesium Carbonate (

) in acetonitrile allows for a "soft" deprotonation.[1] The cesium cation enables a tighter ion pair with the pyrazolate anion compared to sodium, often enhancing regioselectivity through coordination effects. Unlike NaH, this method is reversible, allowing the system to funnel toward the thermodynamic product.[1]

Materials

- Substrate: Thiophene-substituted 1H-pyrazole (1.0 equiv).

© 2026 BenchChem. All rights reserved.

- Electrophile: Alkyl halide (R-X, 1.1 equiv).[1]
- Base: Cesium Carbonate (

  ), anhydrous (2.0 equiv).[1]
- Solvent: Acetonitrile (MeCN), HPLC grade, dried over molecular sieves.[1]

Step-by-Step Methodology

- Preparation: In a flame-dried round-bottom flask equipped with a magnetic stir bar, dissolve the thiophene-pyrazole substrate (1 mmol) in anhydrous MeCN (5 mL, 0.2 M).
- Activation: Add

  (2 mmol) in a single portion. Stir at room temperature for 15 minutes. Note: The suspension may turn slightly yellow, indicating anion formation.[1]
- Addition: Add the alkyl halide (1.1 mmol) dropwise.
  - Critical Control: If the alkyl halide is a liquid, add neat. If solid, dissolve in minimal MeCN. [1]
- Reaction: Heat the mixture to 60°C under an inert atmosphere (

  or Ar) for 4–12 hours.
  - Monitoring: Check via TLC or LC-MS every 2 hours. Look for the disappearance of the starting material (

) and appearance of the product (

).
- Workup: Cool to room temperature. Filter the solids through a Celite pad to remove inorganic salts. Rinse the pad with EtOAc.
- Purification: Concentrate the filtrate in vacuo. Purify via flash column chromatography (Hexanes/EtOAc gradient).

© 2026 BenchChem. All rights reserved.

- Isomer Separation: Regioisomers often have distinct

  values (

).[1] The

  -alkylated product (usually less polar if sterically crowded) typically elutes first.

Protocol B: Copper-Catalyzed -Arylation (Chan-Lam)

Objective: Introduction of aryl groups using boronic acids under mild conditions.[1][2][3]

Rationale

The Chan-Lam coupling is superior to Palladium methods for thiophene derivatives because it avoids the harsh temperatures and strong bases that can degrade the thiophene ring. It utilizes Cu(OAc)2 and atmospheric oxygen (or a specific oxidant) to drive the cycle via a Cu(II)/Cu(III) species.[1]

Materials

- Substrate: Thiophene-substituted 1H-pyrazole (1.0 equiv).
- Coupling Partner: Aryl boronic acid (

  , 1.5–2.0 equiv).[1]
- Catalyst: Copper(II) Acetate (

  , 0.1–0.5 equiv).[1]
- Ligand/Base: Pyridine (2.0 equiv) or TEA.[1]
- Solvent: Dichloromethane (DCM) or Methanol (MeOH).[1]

Step-by-Step Methodology

- Setup: To a vial equipped with a stir bar, add the pyrazole (1.0 mmol), aryl boronic acid (1.5 mmol), and

© 2026 BenchChem. All rights reserved.

(0.2 mmol, 20 mol%).

- Solvent & Base: Add DCM (5 mL) followed by Pyridine (2.0 mmol).
  - Note: Do not degas the solvent. This reaction requires oxygen.
- Oxidation: Cap the vial loosely or attach an oxygen balloon (1 atm) if the reaction is sluggish. Stir vigorously at Room Temperature for 16–24 hours.
  - Visual Cue: The reaction mixture typically turns a deep blue/green color (active Cu-pyridine complex).
- Quenching: Dilute with EtOAc (20 mL) and wash with saturated aqueous

  (to sequester copper). The aqueous layer will turn bright blue.
- Isolation: Dry the organic phase over

  , filter, and concentrate. Purify via chromatography.

Protocol C: Palladium-Catalyzed -Arylation (Buchwald-Hartwig)

Objective: Coupling with unreactive aryl halides (Cl, Br) when boronic acids are unavailable.[1]

Rationale

Standard Pd conditions often fail due to sulfur poisoning. We use Pre-catalysts (e.g., BrettPhos Pd G3) which rapidly generate the active

species.[1] Bulky biaryl phosphine ligands (BrettPhos or tBuXPhos) shield the metal center from thiophene sulfur coordination.

Materials

- Catalyst: BrettPhos Pd G3 (2–5 mol%).[1]
- Base:

© 2026 BenchChem. All rights reserved.

(weak base) or

(if sensitive functional groups exist).[1]

- Solvent: 1,4-Dioxane (anhydrous).

Step-by-Step Methodology

- Inert Setup: Flame-dry a Schlenk tube and cycle with Argon 3 times.
- Charging: Add Pyrazole (1.0 equiv), Aryl Halide (1.1 equiv), Base (1.5 equiv), and Catalyst (0.02 equiv) under a counter-flow of Argon.
- Solvation: Add degassed 1,4-Dioxane (0.2 M). Seal the tube.
- Reaction: Heat to 100°C for 4–8 hours.
  - Self-Validating Step: If the solution turns black and precipitates metal immediately, the catalyst has decomposed (poisoning). If it remains a clear orange/red solution, the active catalytic cycle is maintained.

Analytical Validation: Distinguishing Regioisomers

The most critical step is proving whether you have alkylated

or

. NOESY (Nuclear Overhauser Effect Spectroscopy) is the definitive self-validating method.

The NOESY Logic

- N1-Alkylation: The new alkyl protons will show a Through-Space correlation (NOE) with the substituent at position 5 (or the thiophene proton if attached at C5).
- N2-Alkylation: The new alkyl protons will show an NOE with the substituent at position 3.

© 2026 BenchChem. All rights reserved.

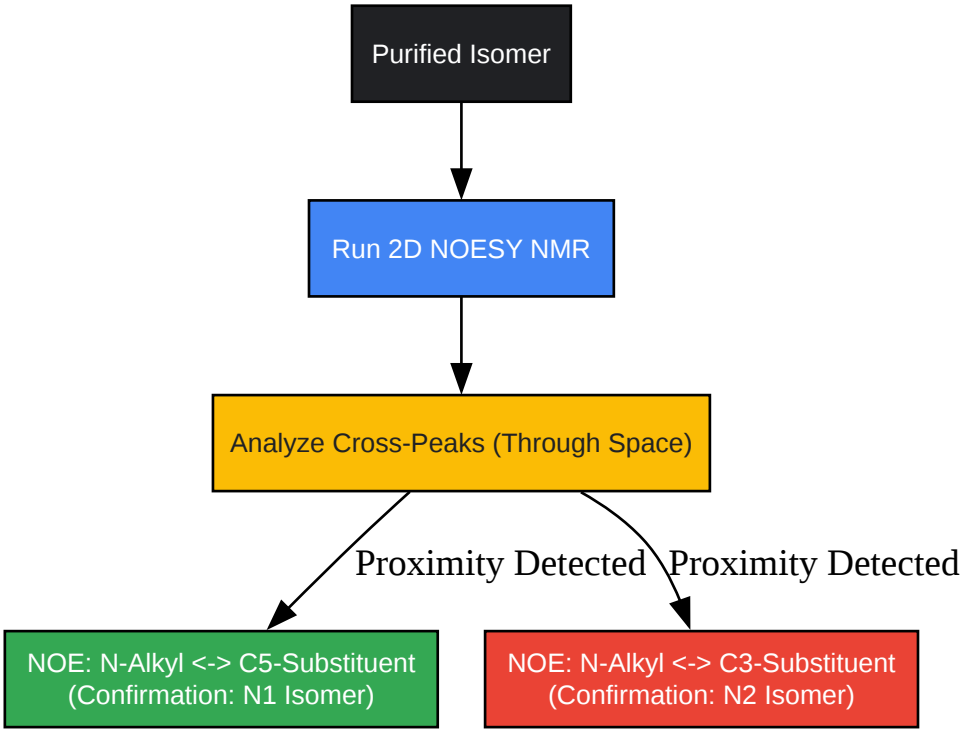

Click to download full resolution via product page

Figure 2: NOESY NMR workflow for unambiguous structural assignment of pyrazole regioisomers.

Data Summary Table

© 2026 BenchChem. All rights reserved.

Parameter	N-Alkylation (Protocol A)	Chan-Lam (Protocol B)[1]	Buchwald (Protocol C)
Electrophile	Alkyl Halide ( )	Boronic Acid ( )	Aryl Halide ( )
Catalyst	None		BrettPhos Pd G3
Base	or NaH	Pyridine/TEA	/
Thiophene Risk	Low (avoid strong oxidants)	Low (Mild, RT)	High (Cat.[1] Poisoning)
Regioselectivity	Steric/Thermodynamic	Steric	Steric
Typical Yield	70–95%	50–80%	40–75%

Troubleshooting & Optimization

© 2026 BenchChem. All rights reserved.

Observation	Root Cause	Corrective Action
Low Yield (Buchwald)	Catalyst poisoning by Thiophene S.	Switch to tBuXPhos or BrettPhos ligands (bulkier).[1] Increase catalyst loading to 5 mol%.
Mixture of Isomers	Fast kinetic reaction (NaH).	Switch to /MeCN and heat longer to allow thermodynamic equilibration.
Thiophene Degradation	Oxidation during Chan-Lam.	Reduce pressure (use air instead of pure). Ensure reaction is at Room Temp.
No Reaction (Alkylation)	Poor nucleophilicity of Pyrazole.	Add 18-crown-6 (if using) or switch to NaH/DMF to force deprotonation.[1]

References

- Regioselective N-Alkylation of Pyrazoles
  - Title: Highly Selective N-Alkylation of Pyrazoles: Crystal Structure Evidence for
  - Source:The Journal of Organic Chemistry, 2022.
  - URL:[Link][1]
- Chan-Lam Coupling Mechanism & Application
  - Title: Copper-promoted C-N bond formation: The Chan-Lam coupling reaction.[2][3][4][5]
  - Source:Organic Chemistry Portal / Tetrahedron Letters.

© 2026 BenchChem. All rights reserved.

- URL:[Link][1]

- Buchwald-Hartwig in Heterocycles
  - Title: Palladium-Catalyzed Coupling of Ammonia and Lithium Amide with Aryl Halides.
  - Source:Journal of the American Chemical Society (Buchwald Lab).
  - URL:[Link][1]

- NMR Characterization of Pyrazoles
  - Title: Revisiting the Structure and Chemistry of 3(5)-Substituted Pyrazoles (Tautomerism & NMR).
  - Source:Molecules, 2019.[1][6]
  - URL:[Link]

Need Custom Synthesis?

BenchChem offers custom synthesis for rare earth carbides and specific isotopiclabeling.

Email: info@benchchem.com or Request Quote Online.

Sources

- 1. Regioselective Synthesis, Structural Characterization, and Antiproliferative Activity of Novel Tetra-Substituted Phenylaminopyrazole Derivatives - PMC [pmc.ncbi.nlm.nih.gov]
- 2. researchgate.net [researchgate.net]
- 3. alfa-chemistry.com [alfa-chemistry.com]
- 4. Chan–Lam coupling - Wikipedia [en.wikipedia.org]
- 5. Coupling of C-nitro-NH-azoles with arylboronic acids. A route to N-aryl-C-nitroazoles - PMC [pmc.ncbi.nlm.nih.gov]
- 6. Revisiting the Structure and Chemistry of 3(5)-Substituted Pyrazoles - PMC [pmc.ncbi.nlm.nih.gov]
- To cite this document: BenchChem. [Precision Functionalization of 1H-Pyrazole Nitrogen in Thiophene-Based Scaffolds]. BenchChem, [2026]. [Online PDF]. Available at:

[https://www.benchchem.com/product/b2665255/docs#precision-functionalization-of-1h-pyrazole-nitrogen-in-thiophene-based-scaffolds]

Disclaimer & Data Validity:

The information provided in this document is for Research Use Only (RUO) and is strictly not intended for diagnostic or therapeutic procedures. While BenchChem strives to provide accurate protocols, we make no warranties, express or implied, regarding the fitness of this product for every specific experimental setup.

Technical Support: The protocols provided are for reference purposes. Unsure if this reagent suits your experiment?

Need Industrial/Bulk Grade? Request Custom Synthesis Quote

BenchChem

Our mission is to be the trusted global source of essential and advanced chemicals, empowering scientists and researchers to drive progress in science and industry.

Contact

Address: 3281 E Guasti Rd

Ontario, CA 91761, United States

Phone: (601) 213-4426

Email: info@benchchem.com

Contact our Ph.D. Support Team for a compatibility check

© 2026 BenchChem. All rights reserved.