Comprehensive Structural Elucidation of 6,6-Dimethyl-1-azaspiro[3.4]octane·HCl

Author: BenchChem Technical Support Team. **Date**: May 2026

Compound of Interest

Compound Name:	*6,6-Dimethyl-1-azaspiro[3.4]octane hydrochloride*
CAS No.:	*2377030-65-2*
Cat. No.:	*B2600629*

Get Quote

Introduction & Strategic Importance

The 6,6-Dimethyl-1-azaspiro[3.4]octane scaffold represents a specific class of "spiro-fused" bicyclic amines.[1] Unlike fused or bridged systems, spiro compounds share a single quaternary carbon atom, creating a rigid orthogonal orientation between the two rings.[1] In drug discovery, this specific architecture is prized for:

- Vector Positioning: The spiro center (C4) locks the nitrogen vector relative to the lipophilic gem-dimethyl tail, improving receptor binding selectivity.[1]
- Metabolic Stability: The gem-dimethyl group at C6 blocks metabolic oxidation at the typically labile cyclopentane positions.
- Fsp3 Character: High fraction of sp3 carbons improves solubility and lowers promiscuity compared to flat aromatic analogs.

This guide treats the Hydrochloride (HCl) salt form, as the free base is often a volatile oil prone to oxidation, whereas the salt is a stable crystalline solid suitable for rigorous analysis.[1]

© 2026 BenchChem. All rights reserved.

Structural Connectivity[2][3]

- Ring A (4-membered): Azetidine moiety (Positions 1, 2, 3, 4).[1] Nitrogen is at position 1.
- Ring B (5-membered): Cyclopentane moiety (Positions 4, 5, 6, 7, 8).[1]
- Spiro Center: Carbon-4 (C4).[1]
- Substituents: Two methyl groups at Carbon-6 (C6).[1]

Elucidation Workflow Strategy

The following logic flow ensures self-validating structural proof, moving from elemental composition to absolute spatial arrangement.

© 2026 BenchChem. All rights reserved.

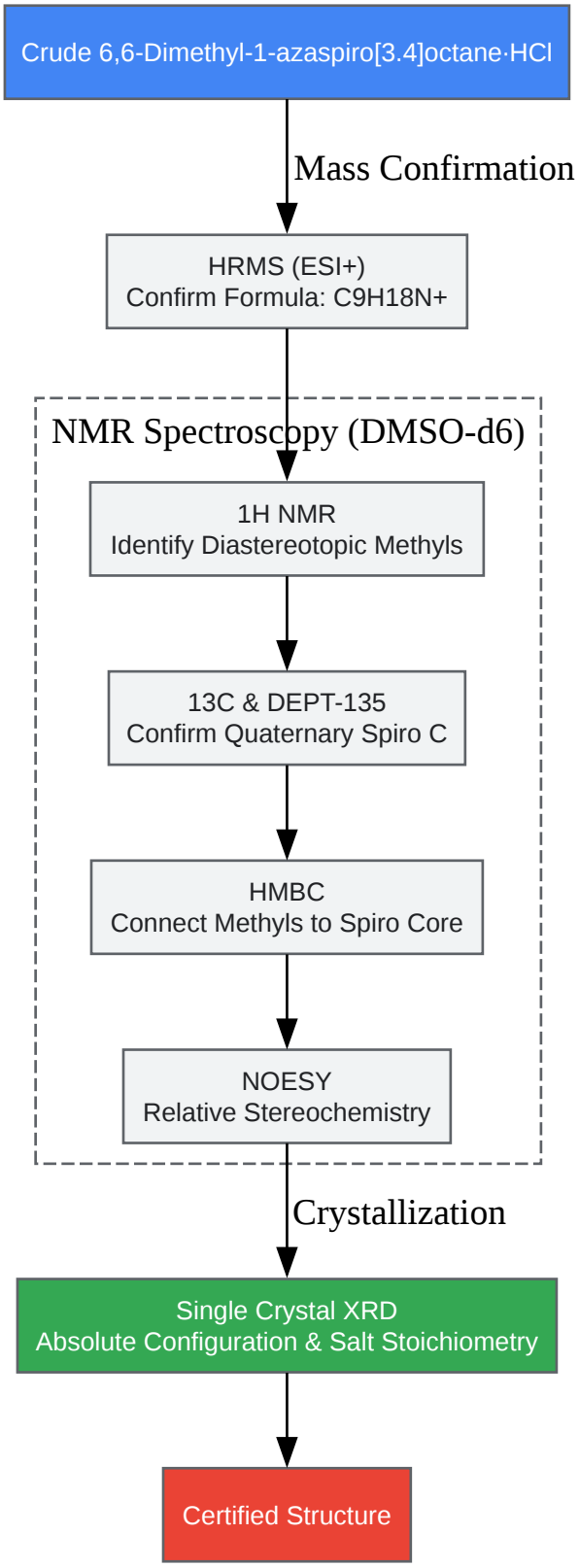

Click to download full resolution via product page

© 2026 BenchChem. All rights reserved.

Caption: Logical workflow for structural validation, prioritizing non-destructive NMR techniques before destructive or time-intensive XRD analysis.

High-Resolution Mass Spectrometry (HRMS)[1]

Objective: Establish the molecular formula and degree of unsaturation (DoU).

- Method: Electrospray Ionization (ESI) in Positive Mode.
- Theoretical Calculation:
  - Formula (Free Base):
  - Protonated Species

    :

    [1]
  - Exact Mass:

    Da.
- Acceptance Criteria: Mass error < 5 ppm.

Fragmentation Pattern (MS/MS): Unlike linear amines, the spiro-system shows resistance to simple cleavage.[1]

- Base Peak:

  (

  140.14).
- Loss of

  : Neutral loss of 17 Da is unlikely as the primary fragmentation due to the cyclic azetidine.
- Ring Opening: Retro-[2+2] cleavage of the azetidine ring is a characteristic pathway, often yielding a fragment corresponding to the loss of ethylene (

© 2026 BenchChem. All rights reserved.

, -28 Da) or propene depending on substitution.[1]

NMR Spectroscopy: The Core Validation

Solvent Selection:DMSO-d6 is required.

- Reasoning: The HCl salt is insoluble in

  . Furthermore, DMSO-d6 slows proton exchange, allowing the observation of the ammonium protons (

  ), which provides crucial integration data.[1]

1H NMR Assignment (500 MHz, DMSO-d6)[1][4]

The molecule possesses a chiral center at C4 (the spiro carbon). Even though the cyclopentane ring appears symmetric, the chiral spiro center renders the two faces of the cyclopentane ring chemically distinct.

- Key Consequence: The gem-dimethyl groups at C6 are diastereotopic. They will appear as two distinct singlets, not one.

© 2026 BenchChem. All rights reserved.

Position	Type	(ppm)	Multiplicity	Integration	Interpretation
NH2+	Amine	9.20 - 9.50	Broad s	2H	Ammonium salt protons (exchangeable).[1]
H-2	-CH2	3.80 - 4.00	m	2H	Azetidine -protons (deshielded by N).[1]
H-3	-CH2	2.30 - 2.50	m	2H	Azetidine -protons.[1]
H-5, H-8	Ring B CH2	1.60 - 1.90	m (complex)	4H	Cyclopentane methylene protons (diastereotopic).[1]
H-7	Ring B CH2	1.40 - 1.60	m	2H	C7 Methylene (distal to spiro).[1]
Me-a	CH3	1.05	s	3H	Diastereotopic Methyl A.
Me-b	CH3	0.98	s	3H	Diastereotopic Methyl B.

13C NMR & DEPT-135

- Quaternary Carbons: Two expected (C4 Spiro and C6 Dimethyl-bearing).[1] These will disappear in DEPT-135.
- Spiro Shift: The spiro carbon (C4) typically resonates between 40–50 ppm.

© 2026 BenchChem. All rights reserved.

- Gem-Dimethyl C6: The quaternary C6 will appear around 35–40 ppm.

2D Correlation Logic (HMBC)

The HMBC (Heteronuclear Multiple Bond Correlation) experiment is the "smoking gun" for spiro connectivity.

- Pathway 1 (The Spiro Link):
  - Correlations from H-2 (Azetidine) to C4 (Spiro).[1]
  - Correlations from H-5/H-8 (Cyclopentane) to C4 (Spiro).[1]
  - Result: Confirms both rings share Carbon-4.
- Pathway 2 (The Gem-Dimethyl Location):
  - Strong correlations from Me-a/Me-b to C6 (Quaternary), C5, and C7.[1]
  - Crucially, Me-a/Me-b should show a weak or 4-bond correlation to C4 (Spiro) if the distance permits, but no correlation to the azetidine carbons (C2/C3), proving the dimethyls are on the 5-membered ring.[1]

Single Crystal X-Ray Diffraction (XRD)[1]

While NMR provides connectivity, XRD provides the absolute configuration (if resolved) and confirms the salt stoichiometry.[1]

Crystallization Protocol (Vapor Diffusion)

To obtain X-ray quality crystals of the HCl salt:

- Dissolution: Dissolve 20 mg of the crude HCl salt in a minimum amount of Methanol (approx. 0.5 mL) in a small vial.
- Precipitant: Place this open vial inside a larger jar containing Diethyl Ether or Acetone (10 mL).

© 2026 BenchChem. All rights reserved.

- Equilibration: Seal the outer jar. The ether vapors will slowly diffuse into the methanol, reducing solubility and promoting slow crystal growth over 3-7 days.
- Harvest: Colorless prisms or needles are expected.

Structural Refinement

- Space Group: Likely monoclinic (e.g., P21/c) or orthorhombic.[1]
- Chirality: Since the synthetic route (unless stereoselective) usually produces a racemate, the crystal lattice will contain both enantiomers (centrosymmetric space group).[1]
- Validation: The N-C-C bond angles in the azetidine ring should be approx 88-90°, indicating ring strain characteristic of the 4-membered system.

References

- Spiro-Amine Synthesis
  - Burkhard, J. A., et al. "Synthesis of novel azaspiro[3.4]octanes as multifunctional modules in drug discovery."[1] Organic Letters 13.22 (2011): 6134-6137.[1][2] Link[1]
- NMR of Spiro Systems
  - Claridge, T. D. W.[1] High-Resolution NMR Techniques in Organic Chemistry. 3rd Ed. Elsevier, 2016.[1] (Chapter 5: Correlations through the Chemical Bond). Link
- Gem-Dimethyl Effect
  - Jung, M. E., & Piizzi, G. "Gem-disubstituent effect: theoretical basis and synthetic applications."[1] Chemical Reviews 105.5 (2005): 1735-1766.[1] Link[1]
- Crystallography of Salts
  - Hulliger, J. "Chemistry and Physics of Crystal Growth." Angewandte Chemie International Edition 33.2 (1994): 143-162.[1] Link[1]

© 2026 BenchChem. All rights reserved.

Need Custom Synthesis?

BenchChem offers custom synthesis for rare earth carbides and specific isotopiclabeling.

Email: info@benchchem.com or Request Quote Online.

Sources

- 1. mdpi.com [mdpi.com]
- 2. Synthesis of novel azaspiro[3.4]octanes as multifunctional modules in drug discovery - PubMed [pubmed.ncbi.nlm.nih.gov]
- To cite this document: BenchChem. [Comprehensive Structural Elucidation of 6,6-Dimethyl-1-azaspiro[3.4]octane·HCl]. BenchChem, [2026]. [Online PDF]. Available at: [https://www.benchchem.com/product/b2600629/docs#comprehensive-structural-elucidation-of-6-6-dimethyl-1-azaspiro-3-4-octane-hcl]

Disclaimer & Data Validity:

The information provided in this document is for Research Use Only (RUO) and is strictly not intended for diagnostic or therapeutic procedures. While BenchChem strives to provide accurate protocols, we make no warranties, express or implied, regarding the fitness of this product for every specific experimental setup.

Technical Support: The protocols provided are for reference purposes. Unsure if this reagent suits your experiment?

Need Industrial/Bulk Grade? Request Custom Synthesis Quote

BenchChem

Our mission is to be the trusted global source of essential and advanced chemicals, empowering scientists and researchers to drive progress in science and industry.

Contact

Address: 3281 E Guasti Rd

Ontario, CA 91761, United States

Phone: (601) 213-4426

Email: info@benchchem.com

© 2026 BenchChem. All rights reserved.

Contact our Ph.D. Support Team for a compatibility check

© 2026 BenchChem. All rights reserved.