Comparative Guide: Catalysts for Asymmetric Aziridination of Styrene

Author: BenchChem Technical Support Team. **Date**: April 2026

Compound of Interest

Compound Name:	*(2R)-2-phenylaziridine*
CAS No.:	*18142-08-0; 25260-42-8*
Cat. No.:	*B2598813*

Get Quote

Executive Summary

The asymmetric aziridination of styrene represents a critical entry point for synthesizing chiral amine pharmacophores, including phenylglycine derivatives and neuroactive agents. Unlike epoxidation, where established "off-the-shelf" solutions exist (e.g., Jacobsen-Katsen, Shi), aziridination requires a nuanced selection between Lewis acid-mediated concerted pathways (Copper/Rhodium) and metalloradical mechanisms (Cobalt).

This guide objectively compares the three dominant catalytic systems—Copper-Bis(oxazoline), Dirhodium(II), and Cobalt(II)-Porphyrin—providing experimental data, mechanistic insights, and validated protocols to support catalyst selection in drug discovery workflows.

Comparative Performance Matrix

The following data aggregates performance metrics for the aziridination of styrene (and immediate derivatives) using the most effective chiral variants of each catalyst class.

© 2026 BenchChem. All rights reserved.

Feature	Copper(I/II)-BOX	Dirhodium(II) Carboxylates	Cobalt(II)-Porphyrin
Primary Reference	Evans / Jacobsen	Du Bois / Müller	Zhang
Catalyst Example	$Cu(OTf)_2$ + (Ph)-BOX	Rh_2(S-tfpttl)$_4$	[Co(P5)]
Nitrene Source	PhI=NTs (Hypervalent Iodine)	Sulfamates + $PhI(OAc)_2$	Phosphoryl Azides (DPPA)
Styrene Yield	70 – 95%	80 – 95%	60 – 88%
Enantioselectivity (ee)	60 – 97%*	70 – 90%	80 – 94%
Mechanism	Concerted / Stepwise (Cationic)	Concerted Asynchronous	Stepwise Radical (MRC)
Operational Profile	Air-sensitive; requires pre-formed nitrene source.[1]	Robust; in situ nitrene generation.	Mild; uses stable azides; N_2 byproduct.
Best For	Electron-rich styrenes; Benchmarking.	Stereospecificity; C-H insertion prevention.	Electron-deficient styrenes; Mild conditions.

*Note: High ee (>90%) in Cu-BOX systems is often substrate-dependent, favoring substituted styrenes (e.g., 2-chlorostyrene) over simple styrene.

Mechanistic Visualization: Concerted vs. Radical Pathways

Understanding the mechanism is vital for troubleshooting low diastereoselectivity (dr). Copper and Rhodium typically follow a concerted pathway that retains olefin geometry, whereas Cobalt proceeds via a radical intermediate that allows for bond rotation, potentially affecting cis/trans ratios.

© 2026 BenchChem. All rights reserved.

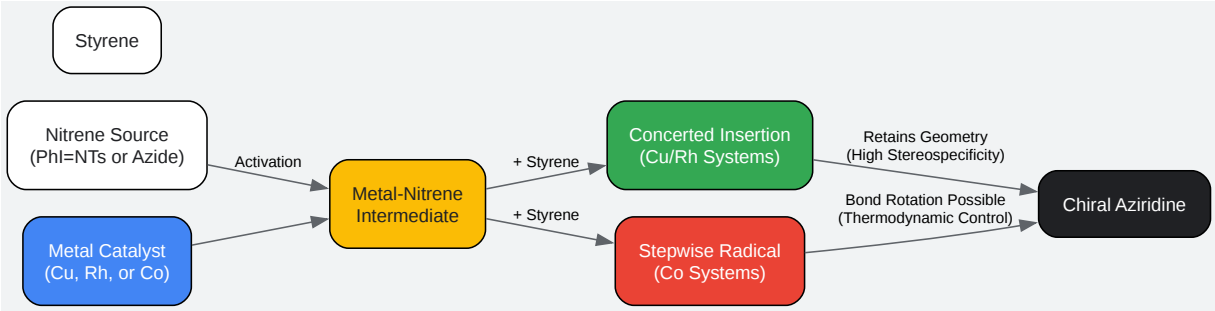

Click to download full resolution via product page

Figure 1: Divergent mechanistic pathways. Cu/Rh favor concerted insertion (Green), while Co utilizes metalloradical catalysis (Red).

Deep Dive & Experimental Protocols

A. The Benchmark: Copper-Bis(oxazoline) System

The Cu-BOX system, pioneered by Evans, remains the academic standard. It utilizes C2-symmetric ligands to create a chiral pocket around the copper center.

Why it works: The bulky substituents on the oxazoline rings (Phenyl or t-Butyl) sterically hinder one face of the incoming olefin, forcing the nitrene transfer to occur enantioselectively.

Protocol 1: Enantioselective Aziridination of Styrene (Evans Method)

This protocol is a self-validating system; the color change from blue/green to brown indicates active nitrene formation.

Reagents:

- Styrene (1.0 mmol)
- PhI=NTs (N-(p-tolylsulfonyl)imino]phenyliodinane) (1.2 mmol)

© 2026 BenchChem. All rights reserved.

- $Cu(OTf)_2$ (0.05 mmol, 5 mol%)
- (S,S)-Ph-BOX Ligand (0.06 mmol, 6 mol%)
- Dichloromethane (DCM), anhydrous

Step-by-Step Workflow:

- Catalyst Formation: In a flame-dried Schlenk flask under nitrogen, dissolve $Cu(OTf)_2$ (18 mg) and (S,S)-Ph-BOX (22 mg) in anhydrous DCM (5 mL). Stir for 1 hour at room temperature. Checkpoint: Solution should turn a clear deep blue/green.
- Substrate Addition: Add styrene (115 µL, 1.0 mmol) to the catalyst solution. Adjust temperature to 0°C (ice bath) to maximize enantioselectivity.
- Nitrene Transfer: Add PhI=NTs (447 mg, 1.2 mmol) in small portions over 30 minutes. Note: Rapid addition causes exotherms that erode ee.
- Reaction Monitoring: Stir at 0°C. Monitor by TLC (silica, Hex:EtOAc 4:1). The disappearance of the solid PhI=NTs and formation of a new UV-active spot indicates progress.
- Workup: Filter the mixture through a short plug of silica gel to remove copper salts. Concentrate the filtrate.
- Purification: Flash chromatography (Hexane/EtOAc) yields (N-Ts)-2-phenylaziridine.

B. The Modern Challenger: Cobalt(II)-Porphyrin System

Developed by X. Peter Zhang, this system uses Metalloradical Catalysis (MRC). It is superior for safety and scalability because it uses organic azides (generating N_2 gas) rather than unstable hypervalent iodine reagents.

Why it works: The paramagnetic Co(II) center stabilizes a nitrene radical intermediate. The D2-symmetric porphyrin ligand (e.g., Co(P5)) provides a rigid chiral environment that withstands the radical mechanism.

© 2026 BenchChem. All rights reserved.

Protocol 2: Radical Aziridination with Diphenylphosphoryl Azide (DPPA)

This protocol minimizes waste and avoids heavy oxidants.

Reagents:

- Styrene (1.0 mmol)
- Diphenylphosphoryl azide (DPPA) (1.2 mmol)
- Catalyst: [Co(P5)] (0.05 mmol, 5 mol%)
- 4 Å Molecular Sieves (100 mg)
- Solvent: Chlorobenzene or Benzene

Step-by-Step Workflow:

- Setup: In a dry screw-capped vial containing 4 Å MS, add [Co(P5)] catalyst (approx. 50 mg depending on MW) and styrene (1.0 mmol).
- Inerting: Purge the vial with nitrogen for 5 minutes.
- Reagent Addition: Add DPPA (1.2 mmol) via syringe.
- Activation: Heat the mixture to 40°C or 80°C (depending on azide reactivity). Checkpoint: Evolution of N_2 bubbles confirms initiation.
- Completion: Stir for 18 hours. The reaction is typically cleaner than Cu-mediated routes, often requiring only filtration and evaporation.
- Purification: Flash chromatography yields the N-phosphoryl aziridine, which can be easily deprotected to the free amine.

Critical Troubleshooting Guide

© 2026 BenchChem. All rights reserved.

Problem	Likely Cause	Solution
Low Yield (<50%)	Catalyst poisoning by water; Nitrene homocoupling.	Use strictly anhydrous solvents; Add nitrene source slowly (syringe pump).
Low ee (<50%)	Background reaction (uncatalyzed); Ligand dissociation.	Ensure Ligand:Metal ratio is >1:1 (e.g., 1.2:1); Lower temperature to -20°C.
Ring Opening	Product instability on silica; Acidic impurities.	Pre-treat silica gel with 1% Triethylamine; Store product at -20°C.

References

- Evans, D. A., et al. "Bis(oxazoline)–Copper Complexes as Chiral Catalysts for the Enantioselective Aziridination of Olefins." Journal of the American Chemical Society, vol. 115, no.[2] 12, 1993, pp. 5328–5329. Link

- Li, Z., Conser, K. R., & Jacobsen, E. N. "Asymmetric Alkene Aziridination with Readily Available Chiral Diimine-Based Catalysts." Journal of the American Chemical Society, vol. 115, no.[2] 12, 1993, pp. 5326–5327. Link

- Guthikonda, K., & Du Bois, J. "A Unique and Highly Efficient Method for Catalytic Aziridination." Journal of the American Chemical Society, vol. 124, no.[3] 46, 2002, pp. 13672–13673. Link

- Ruppel, J. V., et al. "Cobalt-Catalyzed Asymmetric Olefin Aziridination with Diphenylphosphoryl Azide." Organic Letters, vol. 10, no.[4][5] 10, 2008, pp. 1995–1998.[5] Link

- Müller, P., & Fruit, C. "Enantioselective Catalytic Aziridinations and Asymmetric Nitrene Insertions into C-H Bonds."[3] Chemical Reviews, vol. 103, no.[3] 8, 2003, pp. 2905–2920. Link

© 2026 BenchChem. All rights reserved.

Need Custom Synthesis?

BenchChem offers custom synthesis for rare earth carbides and specific isotopiclabeling.

Email: info@benchchem.com or Request Quote Online.

Sources

- 1. mdpi.com [mdpi.com]
- 2. denmarkgroup.web.illinois.edu [denmarkgroup.web.illinois.edu]
- 3. macmillan.princeton.edu [macmillan.princeton.edu]
- 4. mdpi.com [mdpi.com]
- 5. pubs.acs.org [pubs.acs.org]
- To cite this document: BenchChem. [Comparative Guide: Catalysts for Asymmetric Aziridination of Styrene]. BenchChem, [2026]. [Online PDF]. Available at: [https://www.benchchem.com/product/b2598813/docs#comparative-guide-catalysts-for-asymmetric-aziridination-of-styrene]

Disclaimer & Data Validity:

The information provided in this document is for Research Use Only (RUO) and is strictly not intended for diagnostic or therapeutic procedures. While BenchChem strives to provide accurate protocols, we make no warranties, express or implied, regarding the fitness of this product for every specific experimental setup.

Technical Support: The protocols provided are for reference purposes. Unsure if this reagent suits your experiment?

Need Industrial/Bulk Grade? Request Custom Synthesis Quote

© 2026 BenchChem. All rights reserved.

BenchChem

Our mission is to be the trusted global source of essential and advanced chemicals, empowering scientists and researchers to drive progress in science and industry.

Contact

Address: 3281 E Guasti Rd

Ontario, CA 91761, United States

Phone: (601) 213-4426

Email: info@benchchem.com

Contact our Ph.D. Support Team for a compatibility check

© 2026 BenchChem. All rights reserved.