Technical Support Center: Method Development for Chiral Separation of Pyrrole Enantiomers

Author: BenchChem Technical Support Team. **Date**: February 2026

Compound of Interest		
Compound Name:	*4-phenyl-1H-pyrrole-2-carboxylic acid*	
CAS No.:	*79600-87-6*	
Cat. No.:	*B2543179*	*Get Quote*

Welcome to the technical support center for the chiral separation of pyrrole enantiomers. This guide is designed for researchers, scientists, and drug development professionals to provide in-depth, practical guidance on method development and to offer solutions to common challenges encountered during the enantioselective analysis of this important class of heterocyclic compounds. The pyrrole ring is a key structural motif in numerous pharmaceuticals, and ensuring enantiomeric purity is a critical aspect of drug safety and efficacy.[1][2] This resource synthesizes established chromatographic principles with field-proven insights to empower you to develop robust and reliable chiral separation methods.

Understanding the Challenge: The Nature of Pyrrole Enantiomers

The successful chiral separation of pyrrole enantiomers hinges on understanding the physicochemical properties of the pyrrole ring. Pyrrole is an aromatic heterocycle where the nitrogen's lone pair of electrons participates in the π-system, contributing to its aromaticity.[3] This aromatic character allows for potential π-π stacking interactions with certain chiral stationary phases (CSPs).[4][5] While pyrrole itself is a very weak base (conjugate acid pKa of -3.8), substituted pyrroles and related structures like pyrrolidines can have significantly different basicities, which will heavily influence their interaction with CSPs and the mobile phase.[3] These properties dictate the choice of analytical technique and the parameters for achieving optimal separation.

© 2026 BenchChem. All rights reserved.

Strategic Method Development Workflow

A systematic approach to method development is crucial for efficiently achieving chiral separation. The following workflow outlines a logical progression from initial screening to method optimization.

© 2026 BenchChem. All rights reserved.

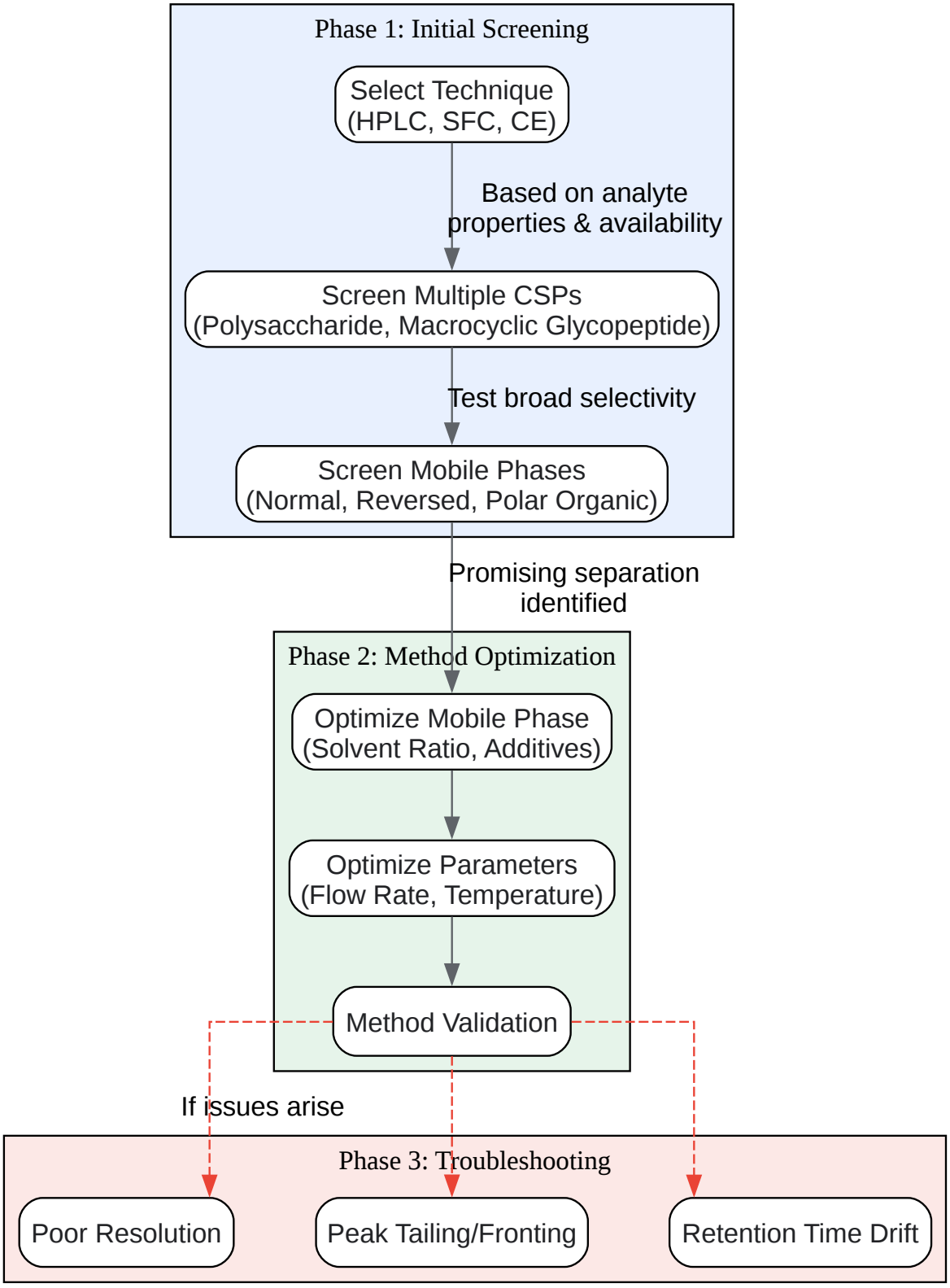

Click to download full resolution via product page

Caption: A systematic workflow for chiral method development.

© 2026 BenchChem. All rights reserved.

Frequently Asked Questions (FAQs) and Troubleshooting Guide

This section addresses common questions and problems encountered during the chiral separation of pyrrole and pyrrolidine enantiomers in a practical question-and-answer format.

Chiral Stationary Phase (CSP) Selection

Q1: What are the best starting points for chiral stationary phase (CSP) selection for pyrrole enantiomers?

A1: For initial screening, polysaccharide-based and macrocyclic glycopeptide-based CSPs are highly recommended due to their broad enantioselectivity for a wide range of compounds, including nitrogen-containing heterocycles.[6]

- Polysaccharide-based CSPs (e.g., Daicel CHIRALPAK®, Phenomenex Lux®): These are the most widely used CSPs.[7] They consist of cellulose or amylose derivatives coated or immobilized on silica. The separation mechanism involves a combination of hydrogen bonding, dipole-dipole interactions, and inclusion complexation within the polymer's helical structure.[7] For example, the diastereomers of the pyrrole-containing drug Atorvastatin have been successfully separated on a Chiralcel® OD-RH column, which is a polysaccharide-based CSP.[8][9]

- Macrocyclic Glycopeptide-based CSPs (e.g., Astec® CHIROBIOTIC®): These CSPs utilize macrocyclic glycopeptides like vancomycin or teicoplanin bonded to silica. They offer multiple interaction mechanisms, including hydrogen bonding, ionic interactions, and inclusion complexing, making them particularly effective for polar and ionizable compounds.[7]

Q2: My pyrrole derivative is highly basic. Are there specific CSPs that are better suited for this?

A2: For basic compounds, both polysaccharide and macrocyclic glycopeptide phases can be effective, but the choice of mobile phase and additives is critical. Pirkle-type CSPs can also be a good option. These phases often have π-acidic or π-basic sites that can engage in π-π stacking interactions with the aromatic pyrrole ring.[4] Additionally, the use of basic mobile phase additives is crucial to prevent peak tailing (see Mobile Phase Troubleshooting section).

© 2026 BenchChem. All rights reserved.

Mobile Phase and Method Optimization

Q3: I have some initial separation, but the resolution is poor (Rs < 1.5). How can I improve it?

A3: Poor resolution can be addressed by systematically optimizing the mobile phase and chromatographic conditions.

- Adjust Mobile Phase Composition: Fine-tune the ratio of the strong eluting solvent (e.g., alcohol in normal phase) to the weak solvent (e.g., hexane). A lower percentage of the strong solvent will generally increase retention and may improve resolution.
- Change the Alcohol Modifier: In normal phase, switching between isopropanol, ethanol, and n-butanol can significantly alter selectivity.
- Optimize Additive Concentration: For ionizable pyrrole derivatives, the concentration of acidic or basic additives can have a profound effect on resolution. Systematically vary the concentration (e.g., 0.05% to 0.5%) to find the optimum.
- Reduce Flow Rate: Lowering the flow rate can enhance resolution by allowing more time for the enantiomers to interact with the CSP.[10]
- Decrease Temperature: Reducing the column temperature often increases enantioselectivity, leading to better resolution.[11]

Q4: I am observing significant peak tailing with my basic pyrrole analyte. What is the cause and how can I fix it?

A4: Peak tailing for basic analytes is a common issue in chiral chromatography, often caused by secondary ionic interactions with acidic residual silanol groups on the silica support of the CSP.[10]

- Solution 1: Add a Basic Modifier: For normal phase separations, add a small amount (typically 0.1-0.2%) of a basic additive like diethylamine (DEA) or triethylamine (TEA) to the mobile phase.[12] This will compete with the basic analyte for the active silanol sites, improving peak shape.

© 2026 BenchChem. All rights reserved.

- Solution 2: Mobile Phase pH Adjustment (Reversed-Phase): In reversed-phase mode, increasing the mobile phase pH to deprotonate the basic analyte can sometimes improve peak shape, but care must be taken not to exceed the pH stability of the column.

- Solution 3: Use a Different CSP: Some modern CSPs are based on silica with improved end-capping or are immobilized, making them more resistant to these secondary interactions.

Q5: My acidic pyrrole derivative is showing poor peak shape. What should I do?

A5: Similar to basic compounds, acidic compounds can interact with basic sites on the stationary phase.

- Solution: Add an Acidic Modifier: Incorporate a small amount (typically 0.1%) of an acidic additive like trifluoroacetic acid (TFA) or acetic acid to the mobile phase.[13] This will protonate any basic sites on the stationary phase and ensure the analyte is in a single ionic form, leading to sharper peaks. For the separation of pyrrolidine-3-carboxylic acid, TFA is often used as a mobile phase modifier to achieve good peak shape on a polysaccharide-based column.[13]

Advanced Techniques and Troubleshooting

Q6: I'm not getting any separation with direct chiral HPLC. Are there other options?

A6: Yes, if direct methods on various CSPs fail, consider an indirect approach or alternative techniques.

- Indirect Method (Pre-column Derivatization): React your racemic pyrrole with an enantiomerically pure chiral derivatizing agent to form diastereomers. These diastereomers have different physical properties and can often be separated on a standard achiral column (like a C18).[13]

- Supercritical Fluid Chromatography (SFC): SFC is an excellent alternative to HPLC for chiral separations. It often provides faster separations and higher efficiency. Polysaccharide-based CSPs are widely used in SFC.[14]

- Capillary Electrophoresis (CE): CE is a high-efficiency technique well-suited for chiral separations, especially for charged molecules. The separation is achieved by adding a chiral

© 2026 BenchChem. All rights reserved.

selector, most commonly a cyclodextrin derivative, to the background electrolyte.[15]

Q7: My retention times are drifting during a sequence of injections. What could be the cause?

A7: Retention time drift can be caused by several factors:

- Column Equilibration: Chiral columns, particularly in normal phase, can require long equilibration times. Ensure the column is fully equilibrated with the mobile phase before starting your sequence.
- Temperature Fluctuations: Use a column oven to maintain a constant temperature.
- Mobile Phase Composition Change: If using a mixture of volatile solvents like hexane, selective evaporation can alter the mobile phase composition over time. Prepare fresh mobile phase regularly.
- "Additive Memory Effect": Strongly adsorbed mobile phase additives or sample components can alter the surface of the stationary phase over time, leading to changes in retention and selectivity.[14] If this is suspected, a thorough column wash is recommended.

Experimental Protocols

Protocol 1: Direct Chiral HPLC Separation of a Pyrrolidine Derivative

This protocol is a representative method for the direct chiral separation of a compound like pyrrolidine-3-carboxylic acid.[13]

- Instrumentation: HPLC system with UV detector.
- Chiral Stationary Phase: Polysaccharide-based column (e.g., Chiralcel® OD-H, 250 x 4.6 mm, 5 µm).
- Mobile Phase: A mixture of n-hexane, isopropanol, and trifluoroacetic acid (TFA) (e.g., 90:10:0.1 v/v/v). The optimal ratio should be determined empirically.
- Flow Rate: 1.0 mL/min.

© 2026 BenchChem. All rights reserved.

- Column Temperature: 25 °C.
- Detection: UV at 210 nm.
- Sample Preparation: Dissolve the sample in the mobile phase at a concentration of approximately 1 mg/mL.
- Procedure: a. Equilibrate the column with the mobile phase until a stable baseline is achieved. b. Inject the sample and record the chromatogram. c. The two enantiomers should elute at different retention times.

Protocol 2: Indirect Chiral HPLC Separation via Derivatization

This protocol outlines the steps for an indirect chiral separation.[13]

- Derivatization: a. React the racemic pyrrole/pyrrolidine analyte with an enantiomerically pure chiral derivatizing agent (e.g., (S)-(-)-α-Methylbenzylamine for a carboxylic acid analyte) in the presence of a suitable coupling agent to form diastereomers.
- Instrumentation: HPLC system with UV detector.
- Stationary Phase: Standard achiral C18 reversed-phase column.
- Mobile Phase: A gradient of acetonitrile and water, both containing 0.1% formic acid.
- Procedure: a. Dissolve the diastereomeric mixture in the mobile phase. b. Inject the sample onto the equilibrated C18 column and run the gradient. c. The two diastereomers will be separated, allowing for the determination of the original enantiomeric composition.

Data Presentation

Table 1: Starting Conditions for Chiral HPLC and SFC Screening

© 2026 BenchChem. All rights reserved.

Parameter	HPLC (Normal Phase)	HPLC (Reversed Phase)	SFC
CSP Type	Polysaccharide, Pirkle-type	Polysaccharide (immobilized), Macrocyclic Glycopeptide	Polysaccharide, Pirkle-type
Mobile Phase	n-Hexane/Alcohol (IPA or EtOH)	Acetonitrile or Methanol/Water with Buffer	CO2/Alcohol (MeOH or EtOH)
Additives	Basic analytes: 0.1% DEA/TEAAcidic analytes: 0.1% TFA/Acetic Acid	pH-adjusting buffers (e.g., ammonium acetate, phosphate)	Basic analytes: 0.1% DEAAcidic analytes: 0.1% TFA
Flow Rate	0.5 - 1.5 mL/min	0.5 - 1.5 mL/min	2.0 - 4.0 mL/min
Temperature	15 - 40 °C	15 - 40 °C	25 - 40 °C

Logical Relationships in Chiral Recognition

The fundamental principle of chiral separation is the formation of transient diastereomeric complexes between the enantiomers and the chiral selector. The stability of these complexes differs, leading to different retention times.

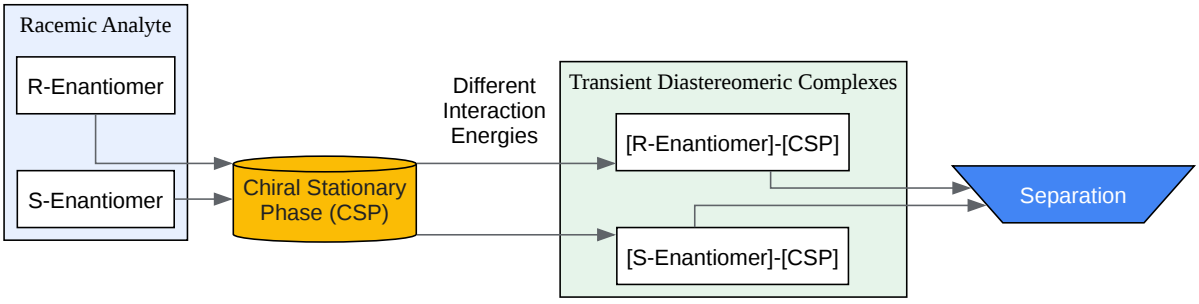

© 2026 BenchChem. All rights reserved.

Click to download full resolution via product page

Caption: Chiral recognition mechanism in chromatography.

By understanding the principles outlined in this guide and systematically applying the troubleshooting strategies, you will be well-equipped to tackle the challenges of developing robust and reliable methods for the chiral separation of pyrrole enantiomers.

References

- Fagnani, D. E., et al. A simple chiral recognition system to investigate substituent effects on pi-pi interactions. Org. Lett. 2012;14(13):3442–3445.
- Chiral screening approach of atorvastatin diastereomers by HPLC method. Mediterranean Journal of Pharmacy and pharmaceutical sciences. 2024;4(1):21-26.
- Chiral screening approach of Atorvastatin diasterteomers by HPLC methods. ResearchGate. Available at: [Link]
- Atorvastatin Application Note. Daicel Chiral Technologies. Available at: [Link]
- Using Cyclodextrins to Achieve Chiral and Non-chiral Separations in Capillary Electrophoresis. LCGC International. Available at: [Link]
- Chiral screening approach of atorvastatin diastereomers by HPLC method. Mediterranean Journal of Pharmacy and Pharmaceutical Sciences. Available at: [Link]
- Chiral HPLC Separations. Phenomenex. Available at: [Link]
- Pyrrole. Wikipedia. Available at: [Link]
- Trouble with chiral separations. Chromatography Today. 2020. Available at: [Link]
- Chiral Separations by High-Performance Liquid Chromatography. ResearchGate. Available at: [Link]
- Agilent Chiral Chromatograph Training Guide. Purdue University. Available at: [Link]
- A Strategy for Developing HPLC Methods for Chiral Drugs. LCGC International. Available at: [Link]

© 2026 BenchChem. All rights reserved.

- π-π Interaction in aromatic supramolecular system. ResearchGate. Available at: [Link]
- HPLC Separation of Diastereomers: Chiral Molecular Tools Useful for the Preparation of Enantiopure Compounds and Simultaneous Determination of Their Absolute Configurations. MDPI. Available at: [Link]
- Regulation of π–π interactions between single aromatic molecules by bias voltage. RSC Publishing. 2024. Available at: [Link]
- Synthesis of chiral systems featuring the pyrrole unit: a review. RSC Publishing. 2024. Available at: [Link]
- Synthesis of chiral systems featuring the pyrrole unit: a review. PubMed. 2024. Available at: [Link]
- Enantiomeric Separation of New Chiral Azole Compounds. MDPI. 2021. Available at: [Link]
- Pyrrole: a resourceful small molecule in key medicinal hetero-aromatics. SciSpace. Available at: [Link]
- Insights into the Biological Activities and Substituent Effects of Pyrrole Derivatives: The Chemistry-Biology Connection. PubMed. 2024. Available at: [Link]
- Recent synthetic and medicinal perspectives of pyrroles: An overview. Allied Academies. 2017. Available at: [Link]
- Reinvestigating Pyrrol-2-One-Based Compounds: From Antimicrobial Agents to Promising Antitumor Candidates. MDPI. Available at: [Link]
- Progress in the Stereoselective Synthesis Methods of Pyrrolidine-Containing Drugs and Their Precursors. MDPI. Available at: [Link]

Need Custom Synthesis?

BenchChem offers custom synthesis for rare earth carbides and specific isotopiclabeling.

Email: info@benchchem.com or Request Quote Online.

Sources

- 1. scispace.com [scispace.com]
- 2. alliedacademies.org [alliedacademies.org]
- 3. Pyrrole - Wikipedia [en.wikipedia.org]
- 4. Making Sense of Heteroatom Effects in π–π Interactions - PMC [pmc.ncbi.nlm.nih.gov]
- 5. researchgate.net [researchgate.net]
- 6. π-Cation Interactions in Molecular Recognition: Perspectives on Pharmaceuticals and Pesticides - PMC [pmc.ncbi.nlm.nih.gov]
- 7. Enantioselective functionalization of indoles and pyrroles via an in situ-formed spiro intermediate - PubMed [pubmed.ncbi.nlm.nih.gov]
- 8. medjpps.com [medjpps.com]
- 9. researchgate.net [researchgate.net]
- 10. pdf.benchchem.com [pdf.benchchem.com]
- 11. researchgate.net [researchgate.net]
- 12. pdf.benchchem.com [pdf.benchchem.com]
- 13. pdf.benchchem.com [pdf.benchchem.com]
- 14. chromatographytoday.com [chromatographytoday.com]
- 15. A crystallographic map of chiral recognition in π complexes of aromatic aldehydes and a chiral transition metal Lewis acid: enantioface binding selectivities in solution correlate to distances between metal and carbon stereocentres in the solid state - Journal of the Chemical Society, Chemical Communications (RSC Publishing) [pubs.rsc.org]

- To cite this document: BenchChem. [Technical Support Center: Method Development for Chiral Separation of Pyrrole Enantiomers]. BenchChem, [2026]. [Online PDF]. Available at: [https://www.benchchem.com/product/b2543179#method-development-for-chiral-separation-of-pyrrole-enantiomers]

Disclaimer & Data Validity:

The information provided in this document is for Research Use Only (RUO) and is strictly not intended for diagnostic or therapeutic procedures. While BenchChem strives to provide

© 2026 BenchChem. All rights reserved.

accurate protocols, we make no warranties, express or implied, regarding the fitness of this product for every specific experimental setup.

Technical Support: The protocols provided are for reference purposes. Unsure if this reagent suits your experiment? [Contact our Ph.D. Support Team for a compatibility check]

Need Industrial/Bulk Grade? Request Custom Synthesis Quote

BenchChem

Our mission is to be the trusted global source of essential and advanced chemicals, empowering scientists and researchers to drive progress in science and industry.

Contact

Address: 3281 E Guasti Rd

Ontario, CA 91761, United States

Phone: (601) 213-4426

Email: info@benchchem.com

© 2026 BenchChem. All rights reserved.