A Comparative Guide to Phenoxy Propanols as Solvents for Scientific Applications

Author: BenchChem Technical Support Team. **Date**: May 2026

Compound of Interest

Compound Name:	*2-Phenoxy-1-phenylpropan-1-ol*
CAS No.:	*29509-30-6*
Cat. No.:	*B2533463*

Get Quote

In the intricate world of scientific research and formulation development, the choice of solvent is a critical decision that can profoundly influence experimental outcomes and product performance. Among the diverse array of available solvents, the phenoxy propanol family, a class of glycol ethers, has carved out a significant niche. Their unique combination of solvency, low volatility, and favorable safety profiles makes them versatile candidates for applications ranging from coatings and inks to pharmaceutical and personal care formulations.

This guide provides a comprehensive comparative analysis of key phenoxy propanol isomers, primarily focusing on 1-phenoxy-2-propanol, the most commercially significant member of this class. We will delve into their fundamental physicochemical properties, explore their performance characteristics against alternative solvents, and provide detailed experimental protocols for their evaluation. Our objective is to equip researchers, scientists, and drug development professionals with the necessary data and insights to make informed solvent selection decisions.

Understanding the Phenoxy Propanol Family: Structure and Properties

© 2026 BenchChem. All rights reserved.

The term "phenoxy propanol" most commonly refers to 1-phenoxy-2-propanol, also known as propylene glycol phenyl ether (PPh). However, its isomer, 2-phenoxy-1-propanol, also exists, though it is less frequently used. The seemingly minor difference in the position of the hydroxyl group has a significant impact on their physical and chemical properties.

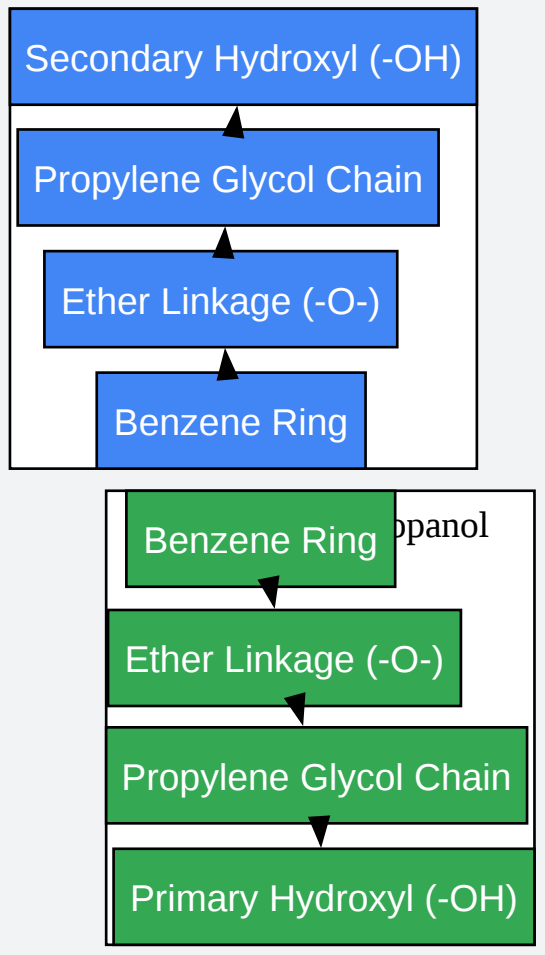

Click to download full resolution via product page

Caption: Molecular structures of 1-phenoxy-2-propanol and its isomer, 2-phenoxy-1-propanol.

The presence of both a polar hydroxyl group and a non-polar phenyl group imparts an amphiphilic character to these molecules, making them effective solvents for a wide range of substances. 1-Phenoxy-2-propanol is a slow-evaporating, colorless liquid with a mild odor. It is an excellent solvent for various resins used in coatings, such as acrylic, epoxy, and alkyd resins.

Comparative Physicochemical Properties

© 2026 BenchChem. All rights reserved.

The selection of a solvent is often dictated by its fundamental physical properties. The following table provides a comparison of key properties for 1-phenoxy-2-propanol and some common alternative solvents.

Property	1-Phenoxy-2-propanol (PPh)	2-Butoxyethanol	Cyclohexanone
CAS Number	770-35-4	111-76-2	108-94-1
Molecular Weight (g/mol)	152.19	118.17	98.14
Boiling Point (°C)	241.2	171	155.6
Vapor Pressure (mm Hg @ 20°C)	<0.01	0.76	4.5
Flash Point (°C)	115	67	44
Viscosity (cP @ 25°C)	25.2	2.9	2.0
Surface Tension (dynes/cm @ 25°C)	38.1	27.4	34.6
Solubility in Water (% by wt @ 25°C)	1.1	Miscible	8.6

Data Sources:

From this data, it is evident that 1-phenoxy-2-propanol is significantly less volatile (lower vapor pressure and higher boiling point) and has a much higher flash point compared to 2-butoxyethanol and cyclohexanone, which translates to enhanced safety in handling and storage. Its higher viscosity can be beneficial in formulations where flow control is important, such as in certain inks and coatings.

Performance in Key Applications: A Comparative Overview

© 2026 BenchChem. All rights reserved.

The true measure of a solvent's utility lies in its performance within a specific application. In this section, we compare 1-phenoxy-2-propanol to other solvents in the context of coatings and as a carrier for active pharmaceutical ingredients (APIs).

Coalescing Agent in Latex Paints

In water-based latex paints, coalescing agents play a crucial role in ensuring the formation of a continuous, durable film after the paint is applied. These agents are solvents that temporarily lower the minimum film formation temperature (MFFT) of the latex polymer particles, allowing them to fuse together as the water evaporates.

1-Phenoxy-2-propanol is widely recognized as an effective coalescing agent, particularly for acrylic and styrene-acrylic binders. Its slow evaporation rate is advantageous, as it remains in the film long enough to facilitate polymer particle coalescence but eventually evaporates completely, ensuring the final film is not plasticized.

Comparative Performance:

- Against 2-Butoxyethanol: While 2-butoxyethanol is also a common coalescing agent, its higher volatility can sometimes lead to faster drying times, which may not be desirable in all applications as it can result in poor film formation. 1-Phenoxy-2-propanol provides a longer "open time" for the paint.

- Against Ester Alcohols (e.g., Texanol™): Ester alcohols are another class of effective coalescing agents. The choice between 1-phenoxy-2-propanol and an ester alcohol often depends on the specific latex polymer being used and the desired final properties of the coating. 1-Phenoxy-2-propanol can sometimes offer better pigment wetting and color development.

Solvent for Active Pharmaceutical Ingredients (APIs)

In the pharmaceutical industry, the ability of a solvent to effectively dissolve an API is paramount for creating stable and bioavailable drug formulations. The amphiphilic nature of 1-phenoxy-2-propanol makes it a candidate for dissolving APIs with a range of polarities.

Experimental Protocol: Determining API Solubility

© 2026 BenchChem. All rights reserved.

This protocol outlines a standard method for comparing the solubility of a model API in 1-phenoxy-2-propanol versus a benchmark solvent like propylene glycol.

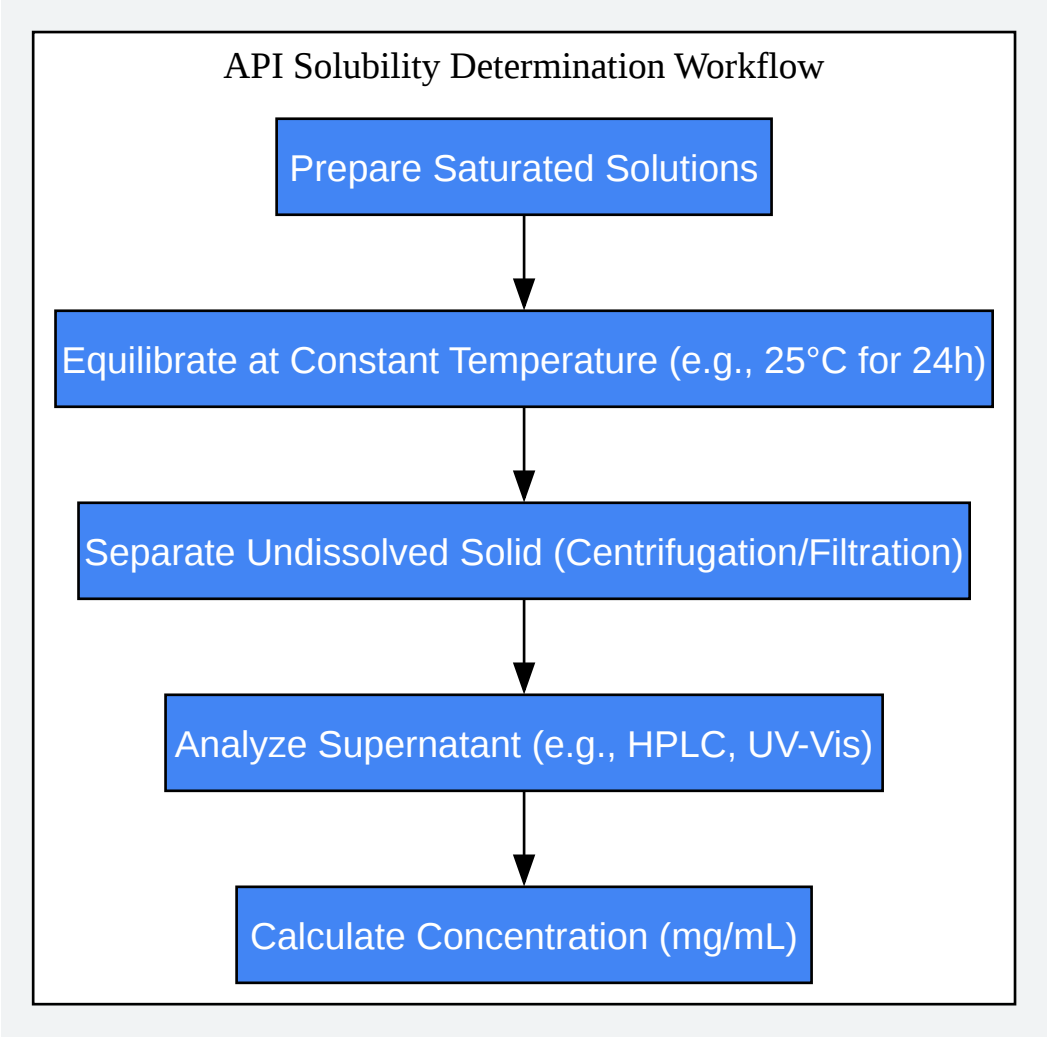

Click to download full resolution via product page

Caption: Workflow for determining the equilibrium solubility of an API in a solvent.

Methodology:

- Preparation of Saturated Solutions: Add an excess amount of the API to separate vials containing 1-phenoxy-2-propanol and the comparative solvent(s).
- Equilibration: Seal the vials and place them in a constant temperature shaker bath (e.g., 25°C) for 24-48 hours to ensure equilibrium is reached.

© 2026 BenchChem. All rights reserved.

- Phase Separation: After equilibration, centrifuge the vials at high speed (e.g., 10,000 rpm for 15 minutes) to pellet the undissolved API. Alternatively, filter the suspension using a syringe filter compatible with the solvent.
- Analysis: Carefully extract an aliquot of the clear supernatant and dilute it with a suitable mobile phase for analysis by a validated analytical technique, such as High-Performance Liquid Chromatography (HPLC) or UV-Visible Spectroscopy, to determine the concentration of the dissolved API.
- Calculation: Based on the analytical results and the dilution factor, calculate the solubility of the API in each solvent, typically expressed in mg/mL.

Rationale for Experimental Choices:

- Constant Temperature: API solubility is highly temperature-dependent. Maintaining a constant temperature is crucial for obtaining reproducible and comparable results.
- Equilibration Time: Allowing sufficient time for equilibration ensures that the solvent is truly saturated with the API, representing the maximum solubility.
- Validated Analytical Method: Using a specific and validated method like HPLC is essential for accurately quantifying the API concentration without interference from the solvent or impurities.

Safety and Environmental Considerations

1-Phenoxy-2-propanol is generally considered to have a favorable safety profile compared to many other glycol ethers. It is not classified as a Hazardous Air Pollutant (HAP) by the U.S. Environmental Protection Agency. Its low vapor pressure also means that exposure through inhalation is limited under normal use conditions. However, as with any chemical, it is essential to handle it with appropriate personal protective equipment (PPE), including gloves and safety glasses, and to work in a well-ventilated area.

Conclusion and Future Outlook

Phenoxy propanols, particularly 1-phenoxy-2-propanol, are highly versatile and effective solvents with a unique balance of properties. Their low volatility, strong solvency for a wide

© 2026 BenchChem. All rights reserved.

range of materials, and favorable safety profile make them a superior choice in many applications compared to more volatile or hazardous alternatives. The experimental frameworks provided in this guide offer a starting point for researchers to conduct their own comparative studies and select the optimal solvent system for their specific needs. As the demand for safer and more environmentally friendly solvents continues to grow, the importance of the phenoxy propanol family in scientific and industrial applications is set to increase.

References

- Propylene Glycol Phenyl Ether (PPh), The Dow Chemical Company, [Link]
- Technical Data Sheet: DOWANOL™ PPh Glycol Ether, The Dow Chemical Company, [Link]
- PubChem Compound Summary for CID 7999, 2-Butoxyethanol, National Center for Biotechnology Information, [Link]

- To cite this document: BenchChem. [A Comparative Guide to Phenoxy Propanols as Solvents for Scientific Applications]. BenchChem, [2026]. [Online PDF]. Available at: [https://www.benchchem.com/product/b2533463/docs#a-comparative-guide-to-phenoxy-propanols-as-solvents-for-scientific-applications]

Disclaimer & Data Validity:

The information provided in this document is for Research Use Only (RUO) and is strictly not intended for diagnostic or therapeutic procedures. While BenchChem strives to provide accurate protocols, we make no warranties, express or implied, regarding the fitness of this product for every specific experimental setup.

Technical Support: The protocols provided are for reference purposes. Unsure if this reagent suits your experiment?

Need Industrial/Bulk Grade? Request Custom Synthesis Quote

© 2026 BenchChem. All rights reserved.

BenchChem

Our mission is to be the trusted global source of essential and advanced chemicals, empowering scientists and researchers to drive progress in science and industry.

Contact

Address: 3281 E Guasti Rd

Ontario, CA 91761, United States

Phone: (601) 213-4426

Email: info@benchchem.com

Contact our Ph.D. Support Team for a compatibility check

© 2026 BenchChem. All rights reserved.