Procedures for using 2-Hydroxy-2,5-dimethylhexanoic acid in metal complexation

Author: BenchChem Technical Support Team. **Date**: May 2026

Compound of Interest	
Compound Name:	*2-Hydroxy-2,5-dimethylhexanoic acid*
CAS No.:	*67019-99-2*
Cat. No.:	*B2510798*

Get Quote

Executive Summary & Chemical Context

2-Hydroxy-2,5-dimethylhexanoic acid (HDMHA) is a sterically hindered

-hydroxy carboxylic acid (AHA). Structurally, it represents a lipophilic analogue of

-Hydroxyisobutyric acid (HIBA), the industry-standard ligand for lanthanide separation via ion exchange.

Unlike HIBA, which is water-soluble, the C8-carbon backbone of HDMHA renders it highly soluble in non-polar organic solvents (kerosene, toluene, 1-octanol). This unique property allows researchers to translate the superior selectivity of HIBA into Solvent Extraction (SX) systems, offering a scalable alternative to chromatographic columns for critical metal separations (e.g., Ln(III)/An(III) or Ni/Co).

Key Chemical Features:

- Chelation Mode: Bidentate (

© 2026 BenchChem. All rights reserved.

) coordination via the carboxylate oxygen and the

-hydroxyl oxygen, forming a stable 5-membered ring.

- Steric Hindrance: The quaternary carbon at the

  -position (bearing methyl, hydroxyl, and isobutyl groups) suppresses esterification and hydrolysis, providing exceptional stability in acidic media.

- Selectivity: The rigidity of the

  -hydroxy chelate ring is highly sensitive to the ionic radius of the metal center, driving size-based selectivity.

Mechanism of Action

The complexation in a biphasic system (Solvent Extraction) generally follows a cation-exchange mechanism. The lipophilic acid (

) resides in the organic phase. Upon contact with an aqueous metal solution (

), protons are released to the aqueous phase, and the metal is extracted as a neutral complex.

General Equilibrium Equation:

Note: Overbars denote species in the organic phase.

Depending on the diluent and metal concentration, the ligand may also participate in solvation, forming species like

.

DOT Diagram: Extraction Mechanism & Workflow

© 2026 BenchChem. All rights reserved.

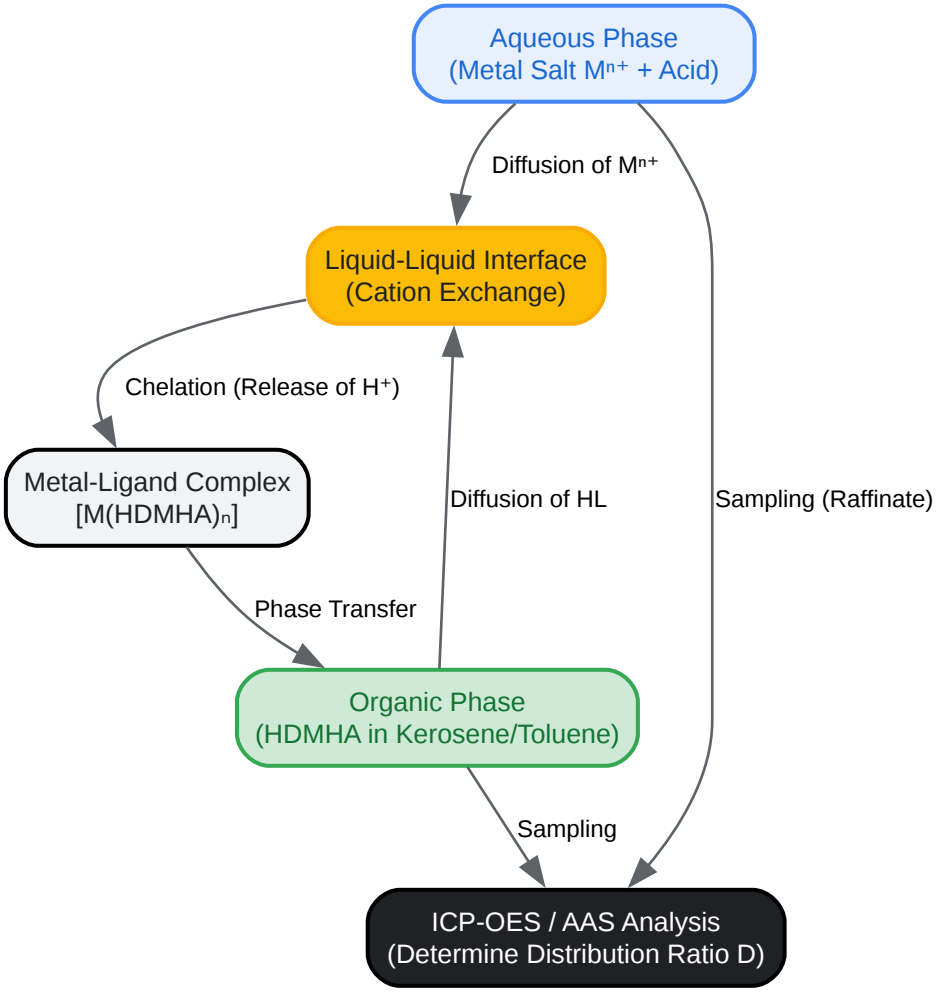

Click to download full resolution via product page

Figure 1: Schematic of the biphasic cation-exchange mechanism driven by HDMHA.

Experimental Protocols

Protocol A: Determination of Stability Constants (Potentiometric Titration)

Purpose: To quantify the binding affinity (

) of HDMHA for a specific metal ion in a single phase before attempting solvent extraction.

Reagents:

- Ligand: HDMHA (>98% purity). Note: If commercial standard is unavailable, synthesis via cyanohydrin hydrolysis of 2,5-dimethyl-2-hexanone is required.
- Solvent: 50% (v/v) Ethanol-Water mixture (to ensure ligand solubility).
- Titrant: 0.1 M NaOH (standardized, carbonate-free).
- Ionic Strength Adjuster: 0.1 M $NaClO_4$ or KNO_3.

Procedure:

- Calibration: Calibrate the glass electrode pH meter using buffers at pH 4.0 and 7.0. Correct for the liquid junction potential of the ethanol-water mixture (Van Uitert & Haas correction).
- Ligand Titration: Prepare 50 mL of 2 mM HDMHA in the solvent with fixed ionic strength (0.1 M $NaClO_4$). Titrate with 0.1 M NaOH to determine the acid dissociation constant (

).
  - Insight: The

    -hydroxyl group increases acidity (lower

) compared to simple fatty acids due to the inductive effect.
- Metal Titration: Prepare a solution containing 2 mM HDMHA and 1 mM Metal Ion (

  or

) in the same solvent. Ratio

  .
- Execution: Titrate with NaOH under nitrogen atmosphere (to exclude CO_2) at 25°C. Record pH vs. Volume of base.
- Data Analysis: Use Hyperquad or BEST software to fit the potentiometric data and calculate stability constants (

).

© 2026 BenchChem. All rights reserved.

Data Output Table (Example Structure):

Parameter	Symbol	Value (Example for Cu^{2+})	Significance
Acid Dissociation		4.85 ± 0.02	Determines pH range for extraction.
Stability Const 1		3.20	Formation of $[ML]^{+}$ species.
Stability Const 2		2.95	Formation of neutral $[ML_2]$ species.

Protocol B: Solvent Extraction & Slope Analysis

Purpose: To determine the stoichiometry of the extracted complex and the optimal pH for separation.

Reagents:

- Organic Phase: 0.1 M – 0.5 M HDMHA in Toluene or Kerosene (with 5% Isodecanol as phase modifier to prevent third-phase formation).
- Aqueous Phase: 10 mM Metal Nitrate solution (

  or

).
- pH Adjustment: dilute HNO_3 and NaOH.

Step-by-Step Methodology:

- Pre-equilibration: Contact the organic phase with blank aqueous acid (pH 2.0) to pre-saturate the solvent with water and acid.
- Contacting: In a 20 mL glass vial, mix equal volumes (5 mL each) of Organic and Aqueous phases (

© 2026 BenchChem. All rights reserved.

).

- Agitation: Shake mechanically for 30 minutes at 25°C. (Equilibrium for AHAs is generally fast, <10 mins, but 30 mins ensures completion).
- Separation: Centrifuge at 3000 rpm for 5 minutes to ensure full phase disengagement.
- pH Measurement: Measure the equilibrium pH (

) of the aqueous phase. Crucial: Do not use the initial pH.
- Analysis: Measure metal concentration in the aqueous raffinate using ICP-OES. Calculate organic concentration by mass balance.
- Slope Analysis:
  - Calculate Distribution Ratio:

    .
  - Plot

    vs.

    .
  - Interpretation: The slope of this line corresponds to the number of protons released (

). For

    , a slope of ~3.0 confirms the cation exchange mechanism.

DOT Diagram: Slope Analysis Logic

© 2026 BenchChem. All rights reserved.

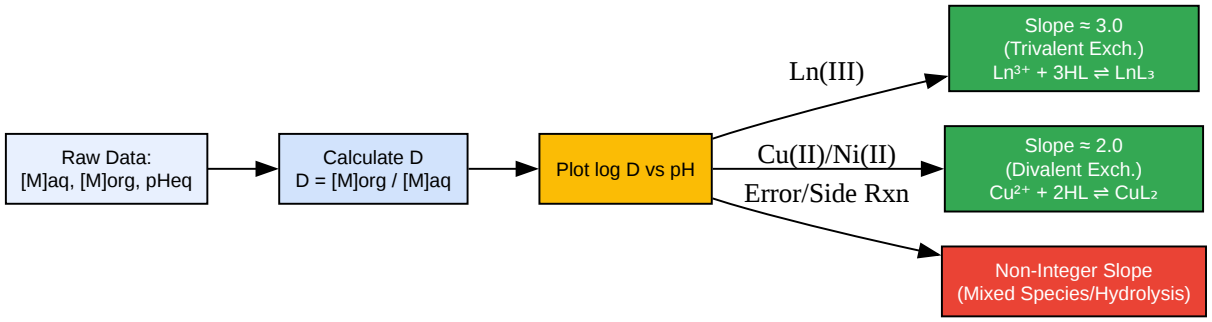

Click to download full resolution via product page

Figure 2: Decision tree for interpreting Slope Analysis data to determine complex stoichiometry.

Protocol C: Solid-State Synthesis (For Structural Characterization)

Purpose: To isolate the metal-HDMHA complex for X-ray crystallography or IR spectroscopy.

- Dissolution: Dissolve 2 mmol of HDMHA in 10 mL of Ethanol.
- Deprotonation: Add 2 mmol of KOH (dissolved in minimal water) to generate the potassium salt (

). Stir for 10 minutes.
- Metal Addition: Add 1 mmol of Metal Chloride (

) dropwise while stirring.
- Precipitation: The complex

  is often less soluble than the reagents. If no precipitate forms, slowly evaporate the ethanol or add water to induce precipitation.
- Recrystallization: Recrystallize from hot ethanol/hexane.
- Validation:

© 2026 BenchChem. All rights reserved.

- FTIR: Look for the shift in the Carbonyl (

) stretch. In the free acid, it appears ~1720 cm^{-1}. In the complex, it shifts to ~1600 cm^{-1} (asymmetric stretch) and ~1400 cm^{-1} (symmetric stretch), confirming coordination.

Safety and Handling References

- Toxicity: As a structural isomer/metabolite of Gemfibrozil, HDMHA should be handled with standard laboratory safety precautions (gloves, fume hood). It is not classified as an acute toxin but should be treated as a potential irritant.
- Waste: Heavy metal raffinates must be disposed of in dedicated inorganic waste streams.

References

- Choppin, G. R., & Silva, R. J. (1956).[1][2] Separation of the Lanthanides by Ion Exchange with Alpha-Hydroxy Isobutyric Acid.[1][2] Journal of Inorganic and Nuclear Chemistry, 3(2), 153-154.
  - Foundational text establishing the selectivity of alpha-hydroxy acids for lanthanides.
- Preston, J. S. (1985). Solvent extraction of metals by carboxylic acids. Hydrometallurgy, 14(2), 171-188.
  - Authoritative review on the mechanism of carboxylic acid extraction, including steric effects.
- Ota, K., Nagao, K., & Ohmiya, H. (2021).[3] Synthesis of Sterically Hindered α-Hydroxycarbonyls through Radical-Radical Coupling.[3] Organic Letters, 23(11), 4420-4425.
  - Modern synthetic route for cre
- Martell, A. E., & Smith, R. M. (2004). NIST Critically Selected Stability Constants of Metal Complexes.
  - The gold standard database for verifying stability constants of AHA analogues.
- Nash, K. L. (1994). A review of the basic chemistry and recent developments in trivalent f-elements separations. Solvent Extraction and Ion Exchange, 12(2), 353-399.

© 2026 BenchChem. All rights reserved.

- Contextualizes the use of alpha-hydroxy ligands in nuclear separ

Need Custom Synthesis?

BenchChem offers custom synthesis for rare earth carbides and specific isotopiclabeling.

Email: info@benchchem.com or Request Quote Online.

Sources

- 1. scispace.com [scispace.com]
- 2. semanticscholar.org [semanticscholar.org]
- 3. Synthesis of Sterically Hindered α-Hydroxycarbonyls through Radical-Radical Coupling [organic-chemistry.org]
- To cite this document: BenchChem. [Procedures for using 2-Hydroxy-2,5-dimethylhexanoic acid in metal complexation]. BenchChem, [2026]. [Online PDF]. Available at: [https://www.benchchem.com/product/b2510798/docs#procedures-for-using-2-hydroxy-2-5-dimethylhexanoic-acid-in-metal-complexation]

Disclaimer & Data Validity:

The information provided in this document is for Research Use Only (RUO) and is strictly not intended for diagnostic or therapeutic procedures. While BenchChem strives to provide accurate protocols, we make no warranties, express or implied, regarding the fitness of this product for every specific experimental setup.

Technical Support: The protocols provided are for reference purposes. Unsure if this reagent suits your experiment?

Need Industrial/Bulk Grade? Request Custom Synthesis Quote

© 2026 BenchChem. All rights reserved.

BenchChem

Our mission is to be the trusted global source of essential and advanced chemicals, empowering scientists and researchers to drive progress in science and industry.

Contact

Address: 3281 E Guasti Rd

Ontario, CA 91761, United States

Phone: (601) 213-4426

Email: info@benchchem.com

Contact our Ph.D. Support Team for a compatibility check

© 2026 BenchChem. All rights reserved.