Precision Building Blocks: Azetidine Terminal Alkynes in Drug Discovery

Author: BenchChem Technical Support Team. **Date**: May 2026

Compound of Interest

Compound Name:	*1-But-3-ynylazetidine*
CAS No.:	*1849381-01-6*
Cat. No.:	*B2505767*

Get Quote

Executive Summary: The "Escape from Flatland"

In modern drug discovery, the transition from planar, aromatic-heavy scaffolds to three-dimensional (

-rich) architectures is critical for improving clinical success rates. Azetidines—strained, four-membered nitrogen heterocycles—represent a "sweet spot" in this transition. They offer a unique balance of metabolic stability, reduced lipophilicity (lowering LogP), and defined exit vectors that distinguish them from their five- and six-membered counterparts (pyrrolidines and piperidines).

This guide focuses on a high-value subclass: Azetidine Terminal Alkynes (e.g., tert-butyl 3-ethynylazetidine-1-carboxylate). These building blocks serve as versatile linchpins, enabling rapid diversification via Click Chemistry (CuAAC) for PROTAC linkers, DNA-Encoded Libraries (DEL), and Fragment-Based Drug Discovery (FBDD).[1]

Physicochemical Profile: Azetidine vs. Homologs

© 2026 BenchChem. All rights reserved.

The incorporation of an azetidine ring alters the physicochemical landscape of a drug candidate. Below is a comparative analysis demonstrating why azetidines are often superior bioisosteres.

Table 1: Comparative Physicochemical Metrics

© 2026 BenchChem. All rights reserved.

Feature	Azetidine (4-membered)	Pyrrolidine (5-membered)	Piperidine (6-membered)	Impact on Drug Design
Ring Strain	~25 kcal/mol	~6 kcal/mol	~0 kcal/mol	High strain can alter pKa and metabolic susceptibility; azetidines are surprisingly stable.
Basicity ( )	~11.0 (typical amine)	~11.3	~11.2	Lower than pyrrolidine helps reduce hERG liability and improves permeability.[1]
Lipophilicity (LogP)	Baseline	+0.3 to +0.5	+0.6 to +0.8	Azetidines significantly lower LogP, improving LLE (Lipophilic Ligand Efficiency).[1]
Geometry	Puckered Square	Envelope	Chair	Azetidine provides distinct exit vectors (vs angles), exploring novel chemical space.[1]

© 2026 BenchChem. All rights reserved.

Graphviz Diagram 1: Bioisosteric Relationships & Properties

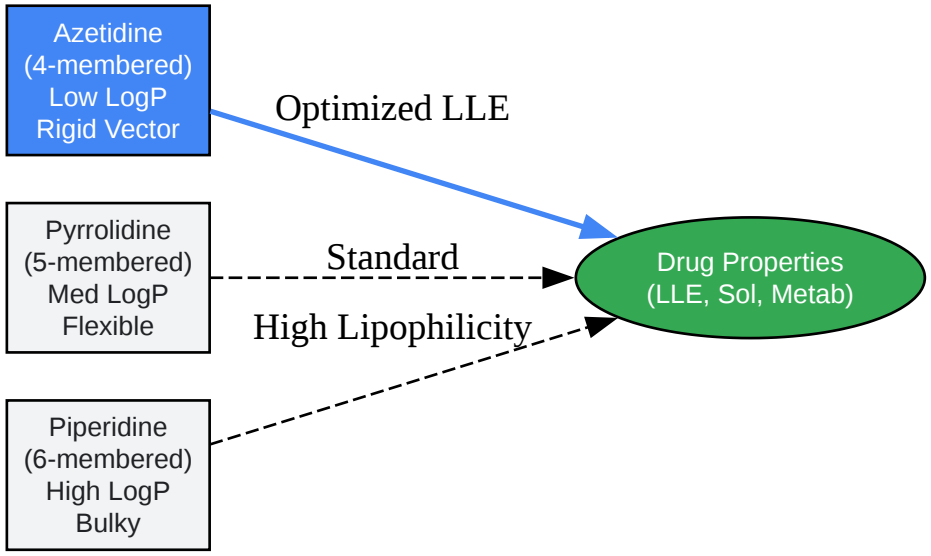

Click to download full resolution via product page

Caption: Structural comparison highlighting the advantageous physicochemical profile of azetidines in lowering lipophilicity while maintaining rigidity.[1]

Synthetic Methodology: Accessing the Alkyne

The synthesis of 3-ethynylazetidine derivatives typically proceeds from the commercially available N-Boc-3-azetidinone. The most robust method utilizes the Bestmann-Ohira Reagent (BOR) for a one-pot homologation of the ketone to the terminal alkyne. This avoids the instability often associated with multistep elimination routes.

Protocol: Bestmann-Ohira Homologation

Target Molecule:tert-Butyl 3-ethynylazetidine-1-carboxylate (CAS: 287193-01-5)

Reagents:

- Substrate:tert-Butyl 3-oxoazetidine-1-carboxylate (N-Boc-3-azetidinone)
- Reagent: Bestmann-Ohira Reagent (Dimethyl (1-diazo-2-oxopropyl)phosphonate)

© 2026 BenchChem. All rights reserved.

- Base: Potassium Carbonate (

)[1]
- Solvent: Methanol (MeOH)[1]

Step-by-Step Procedure:

- Preparation: In a flame-dried round-bottom flask under Nitrogen (

  ), dissolve N-Boc-3-azetidinone (1.0 equiv) in anhydrous Methanol (0.1 M concentration).
- Base Addition: Add Potassium Carbonate (

  , 2.0 equiv) to the solution. The mixture is cooled to 0°C.
- Reagent Addition: Add the Bestmann-Ohira reagent (1.2 equiv) dropwise.
- Reaction: Allow the mixture to warm to room temperature and stir for 4–12 hours. Monitor via TLC (stain with

) or LCMS.[1] The ketone peak should disappear, replaced by the alkyne product.
- Workup: Quench with saturated aqueous

  . Extract with Ethyl Acetate (

).[1] Wash combined organics with brine, dry over

  , and concentrate.
- Purification: Flash column chromatography (Hexanes/EtOAc gradient). The product is typically a white solid or colorless oil.

Mechanism: The base deprotonates the phosphonate, which attacks the ketone. A series of rearrangements and nitrogen elimination (Wolff-like) yields the terminal alkyne.

Graphviz Diagram 2: Synthetic Workflow

© 2026 BenchChem. All rights reserved.

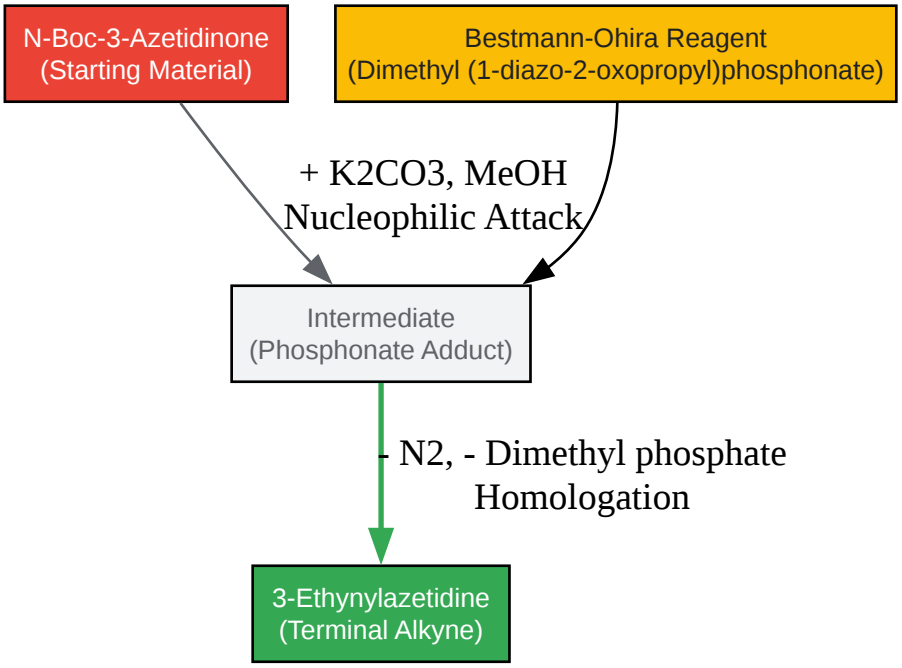

Click to download full resolution via product page

Caption: One-pot synthesis of 3-ethynylazetidine from azetidinone using the Bestmann-Ohira reagent.

Applications in Drug Discovery

The terminal alkyne moiety is a "chemical hook" that allows the azetidine core to be deployed in various high-impact modalities.

A. PROTAC Linkers (Click Chemistry)

In Proteolysis-Targeting Chimeras (PROTACs), the linker's physicochemical properties are crucial for cell permeability and ternary complex formation.

- Problem: Long alkyl or PEG chains are flexible and can collapse, reducing permeability.
- Solution: An azetidine-alkyne linker introduces rigidity and hydrophilicity.
- Reaction: Copper-Catalyzed Azide-Alkyne Cycloaddition (CuAAC).[2][3]
  - Azetidine-Alkyne + Azide-tagged E3 Ligand

© 2026 BenchChem. All rights reserved.

Triazole-linked PROTAC.

B. DNA-Encoded Libraries (DEL)

Terminal alkynes are compatible with the aqueous conditions required for DNA-tagged chemistry. Azetidine alkynes serve as "scaffolds" that can be decorated with diverse building blocks, allowing the screening of billions of compounds against biological targets.

Graphviz Diagram 3: PROTAC Assembly Workflow

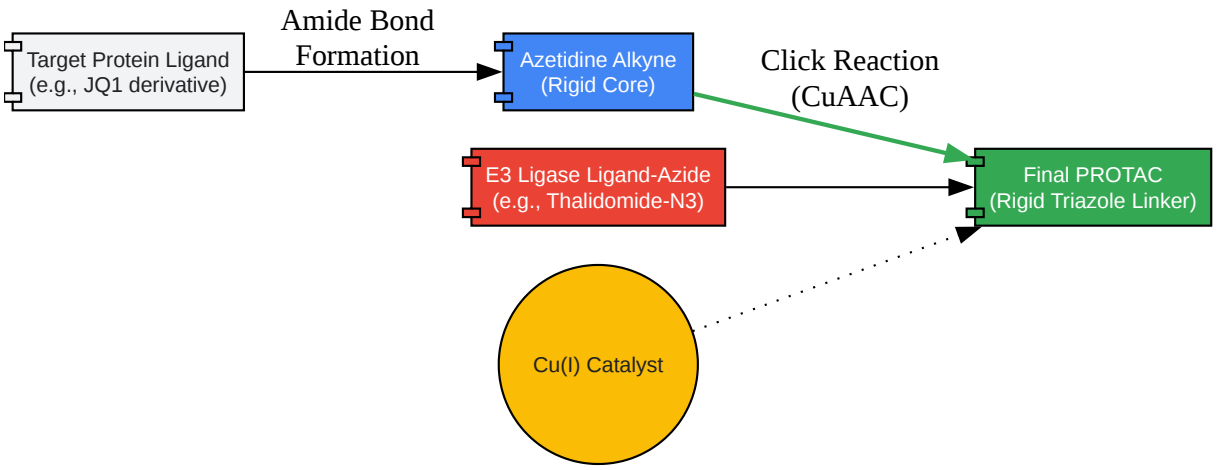

Click to download full resolution via product page

Caption: Assembly of a PROTAC molecule using an azetidine alkyne linker via CuAAC Click Chemistry.

References

- Azetidines in Drug Discovery: "Azetidines: New Perspectives for the Synthesis of Biologically Active Compounds." Chem. Rev., 2020.[4] [1]
- Bestmann-Ohira Reagent: "The Bestmann–Ohira Reagent: A Versatile Reagent in Organic Synthesis." Synlett, 2009.[5] [1]
- Click Chemistry in PROTACs: "Click chemistry in the development of PROTACs." Am. J. Cancer Res., 2023.

© 2026 BenchChem. All rights reserved.

- Azetidine Properties: "Azetidines in medicinal chemistry: emerging applications and approved drugs." Future Med. Chem., 2026.[6][7][8] [1]
- Commercial Building Block: "tert-Butyl 3-ethynylazetidine-1-carboxylate." [1]

Need Custom Synthesis?

BenchChem offers custom synthesis for rare earth carbides and specific isotopiclabeling.

Email: info@benchchem.com or Request Quote Online.

Sources

- 1. Synthesis of New Azetidine and Oxetane Amino Acid Derivatives through Aza-Michael Addition of NH-Heterocycles with Methyl 2-(Azetidin- or Oxetan-3-Ylidene)Acetates - PMC [pmc.ncbi.nlm.nih.gov]
- 2. medchemexpress.com [medchemexpress.com]
- 3. researchgate.net [researchgate.net]
- 4. Design, synthesis, and evaluation of pyrrolidine based CXCR4 antagonists with in vivo anti-tumor metastatic activity - PubMed [pubmed.ncbi.nlm.nih.gov]
- 5. scispace.com [scispace.com]
- 6. wisdomlib.org [wisdomlib.org]
- 7. quora.com [quora.com]
- 8. pubs.acs.org [pubs.acs.org]
- To cite this document: BenchChem. [Precision Building Blocks: Azetidine Terminal Alkynes in Drug Discovery]. BenchChem, [2026]. [Online PDF]. Available at: [https://www.benchchem.com/product/b2505767/docs#precision-building-blocks-azetidine-terminal-alkynes-in-drug-discovery]

Disclaimer & Data Validity:

The information provided in this document is for Research Use Only (RUO) and is strictly not intended for diagnostic or therapeutic procedures. While BenchChem strives to provide accurate protocols, we make no warranties, express or implied, regarding the fitness of this product for every specific experimental setup.

© 2026 BenchChem. All rights reserved.

Technical Support: The protocols provided are for reference purposes. Unsure if this reagent suits your experiment?

Need Industrial/Bulk Grade? Request Custom Synthesis Quote

BenchChem

Our mission is to be the trusted global source of essential and advanced chemicals, empowering scientists and researchers to drive progress in science and industry.

Contact

Address: 3281 E Guasti Rd

Ontario, CA 91761, United States

Phone: (601) 213-4426

Email: info@benchchem.com

Contact our Ph.D. Support Team for a compatibility check

© 2026 BenchChem. All rights reserved.