A Comparative Guide to Validating UNC2025 Hydrochloride Target Engagement

Author: BenchChem Technical Support Team. **Date**: April 2026

Compound of Interest

Compound Name:	*UNC2025 hydrochloride*
Cat. No.:	*B2484027*

Get Quote

For Researchers, Scientists, and Drug Development Professionals

This guide provides a comprehensive comparison of methods to validate the target engagement of **UNC2025 hydrochloride**, a potent and orally bioavailable dual inhibitor of MER and FLT3 receptor tyrosine kinases. The information presented herein is supported by experimental data from peer-reviewed studies and is intended to assist researchers in designing and interpreting experiments aimed at confirming the cellular and in vivo activity of this compound.

Introduction to UNC2025 Hydrochloride

UNC2025 hydrochloride is an ATP-competitive small molecule inhibitor with high affinity for MER and FLT3 kinases, demonstrating IC50 values in the low nanomolar range.[1][2][3] It exhibits significant selectivity for MER and FLT3 over other members of the TAM (Tyro3, Axl, MER) family of kinases, such as Axl.[1][2][3] The dual inhibition of MER and FLT3 makes UNC2025 a promising therapeutic candidate for various hematological malignancies, including acute myeloid leukemia (AML) and B-cell acute lymphoblastic leukemia (B-ALL), where these kinases are often aberrantly expressed or activated.[4][5][6]

© 2026 BenchChem. All rights reserved.

The mechanism of action of UNC2025 involves blocking the phosphorylation of MER and FLT3, which in turn inhibits downstream pro-survival signaling pathways, including AKT, ERK1/2, and STAT6.[2][4][7] This inhibition ultimately leads to decreased cell proliferation, reduced colony formation, and induction of apoptosis in cancer cells dependent on MER or FLT3 signaling.[1][4]

Quantitative Data on UNC2025 Hydrochloride Activity

The following tables summarize the key quantitative data regarding the potency and selectivity of UNC2025.

Table 1: In Vitro Kinase Inhibitory Activity of UNC2025

Target Kinase	IC50 (nM)	Ki (nM)	Source
MER	0.74	0.16	[2][3][8][4]
FLT3	0.8	-	[1][2][3][8]
Axl	122	13.3	[2][3]
Tyro3	-	-	[5]
TRKA	1.67	-	[3]
TRKC	4.38	-	[3]
KIT	8.18	-	[3]

Table 2: Cellular Activity of UNC2025

© 2026 BenchChem. All rights reserved.

Cell Line	Assay	IC50 (nM)	Source
697 (B-ALL)	Mer Phosphorylation Inhibition	2.7	[1][4][5]
Molm-14 (AML)	Flt3 Phosphorylation Inhibition	14	[3][5]
A549 (NSCLC)	Colony Formation Inhibition	-	[1][5]
NOMO-1 (AML)	-	-	[4]

Experimental Protocols for Target Engagement Validation

Validating the target engagement of **UNC2025 hydrochloride** requires a multi-faceted approach, combining biochemical, cellular, and in vivo assays. Below are detailed protocols for key experiments.

In Vitro Kinase Assay

This assay directly measures the ability of UNC2025 to inhibit the enzymatic activity of purified MER and FLT3 kinases.

Protocol:

- Reagents: Purified recombinant MER and FLT3 kinase domains, ATP, substrate peptide (e.g., poly(Glu, Tyr) 4:1), **UNC2025 hydrochloride**, kinase buffer.
- Procedure:
  - Prepare a serial dilution of **UNC2025 hydrochloride**.
  - In a microplate, combine the kinase, substrate peptide, and UNC2025 at various concentrations in the kinase buffer.

© 2026 BenchChem. All rights reserved.

- Initiate the kinase reaction by adding a solution of ATP (at a concentration near the Km for the respective kinase).
- Incubate the reaction at 30°C for a specified time (e.g., 60 minutes).
- Stop the reaction and quantify the amount of phosphorylated substrate. This can be done using various methods, such as radioisotope incorporation ([γ-^{32}P]ATP) or antibody-based detection (e.g., ELISA with a phospho-specific antibody).
- Calculate the percentage of inhibition for each UNC2025 concentration relative to a vehicle control (e.g., DMSO).
- Determine the IC50 value by fitting the dose-response data to a four-parameter logistic equation.

Cellular Phospho-Protein Analysis (Western Blotting)

This method assesses the ability of UNC2025 to inhibit the phosphorylation of its targets, MER and FLT3, within a cellular context.

Protocol:

- Cell Culture: Culture MERTK- or FLT3-expressing cells (e.g., 697 B-ALL or Molm-14 AML cells) to mid-log phase.
- Compound Treatment: Treat the cells with varying concentrations of **UNC2025 hydrochloride** or vehicle for a specified duration (e.g., 1-4 hours).
- Cell Lysis: Harvest the cells and lyse them in a buffer containing protease and phosphatase inhibitors to preserve the phosphorylation state of proteins.
- Protein Quantification: Determine the protein concentration of each lysate using a standard method (e.g., BCA assay).
- SDS-PAGE and Western Blotting:
  - Separate equal amounts of protein from each sample by SDS-polyacrylamide gel electrophoresis (SDS-PAGE).

© 2026 BenchChem. All rights reserved.

- Transfer the separated proteins to a nitrocellulose or PVDF membrane.
- Block the membrane to prevent non-specific antibody binding.
- Incubate the membrane with a primary antibody specific for phosphorylated MERTK (p-MERTK) or phosphorylated FLT3 (p-FLT3).
- Wash the membrane and incubate with a horseradish peroxidase (HRP)-conjugated secondary antibody.
- Detect the signal using an enhanced chemiluminescence (ECL) substrate and image the blot.

- Data Analysis:
  - Strip the membrane and re-probe with antibodies for total MERTK, total FLT3, and a loading control (e.g., β-actin or GAPDH) to ensure equal protein loading.
  - Quantify the band intensities and normalize the phosphorylated protein levels to the total protein levels.
  - Determine the dose-dependent inhibition of target phosphorylation.

Cellular Thermal Shift Assay (CETSA)

CETSA is a powerful technique to confirm direct binding of a compound to its target protein in a cellular environment. Ligand binding typically stabilizes the target protein, leading to a higher melting temperature.[9][10]

Protocol:

- Cell Treatment: Treat intact cells with **UNC2025 hydrochloride** or vehicle.
- Heating: Heat the cell suspensions at a range of different temperatures.
- Lysis and Fractionation: Lyse the cells and separate the soluble protein fraction from the precipitated, denatured proteins by centrifugation.

© 2026 BenchChem. All rights reserved.

- Protein Detection: Analyze the amount of soluble target protein (MER or FLT3) remaining at each temperature using Western blotting or other detection methods like ELISA.[9]
- Data Analysis: Plot the amount of soluble protein as a function of temperature for both treated and untreated samples. A shift in the melting curve to a higher temperature in the presence of UNC2025 indicates target engagement.

Comparison with Alternative MERTK/FLT3 Inhibitors

While UNC2025 is a highly potent and selective dual inhibitor, other compounds targeting MER and/or FLT3 have been developed. A direct, head-to-head comparison in the same study is often unavailable; however, data from various sources can provide a comparative perspective.

Table 3: Comparison of UNC2025 with Other MERTK/FLT3 Inhibitors

Compound	Primary Target(s)	Key Features	Source
UNC2025	MER, FLT3	Potent, orally bioavailable, dual inhibitor with good selectivity over Axl.	[1][5][6]
UNC1062	MER	Precursor to UNC2025 with poor pharmacokinetic properties.	[5][6]
MRX-2843	MER, FLT3	Dual kinase inhibitor with limited off-target activity.	[11]
Gilteritinib	FLT3, Axl	FDA-approved for relapsed or refractory AML with a FLT3 mutation. Also inhibits Axl.	(General knowledge)
Quizartinib	FLT3	Potent and selective FLT3 inhibitor.	(General knowledge)

© 2026 BenchChem. All rights reserved.

Visualizing Pathways and Workflows

The following diagrams illustrate the signaling pathway affected by UNC2025, a typical experimental workflow for target validation, and a logical comparison of UNC2025 with its alternatives.

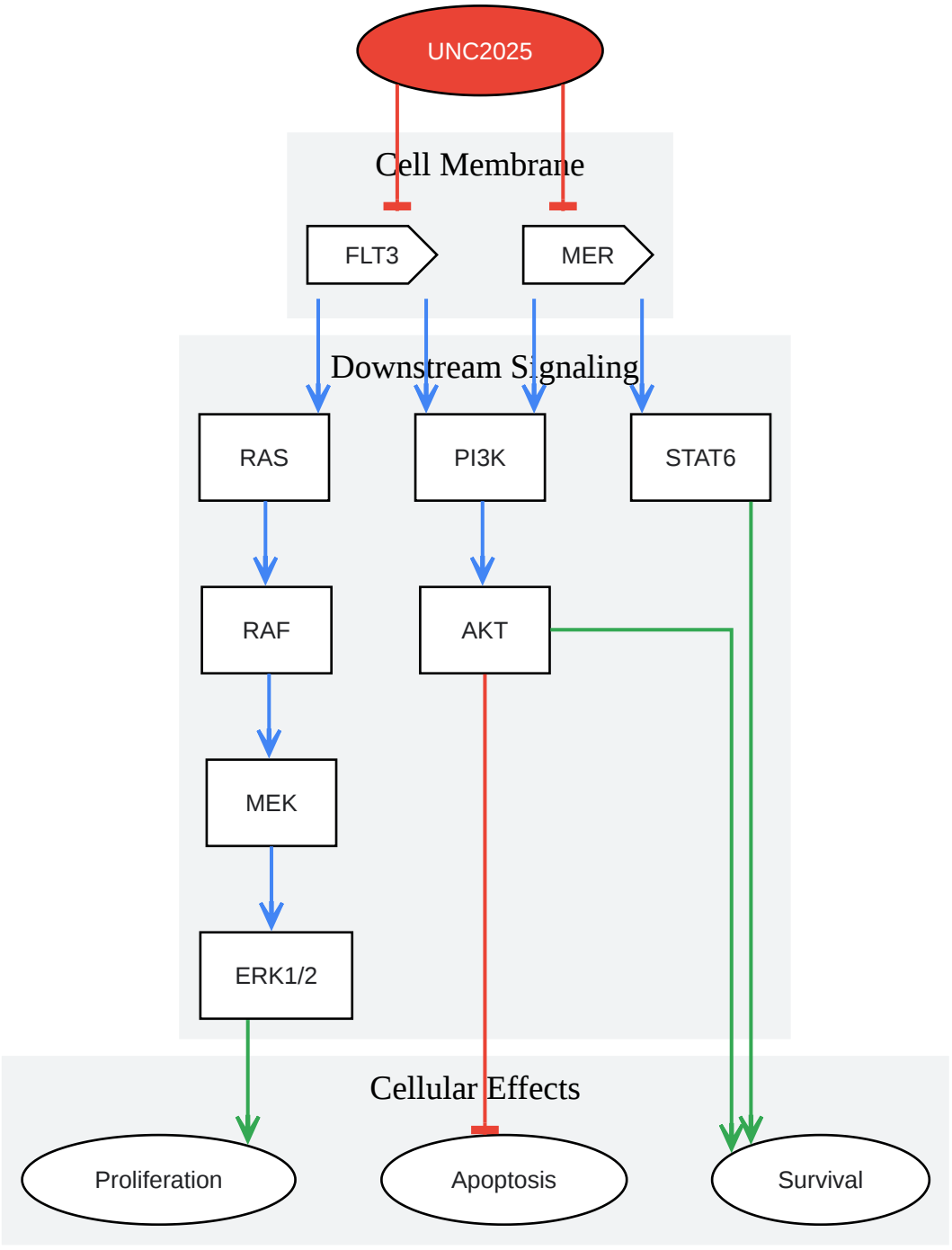

© 2026 BenchChem. All rights reserved.

Click to download full resolution via product page

Caption: MER/FLT3 signaling pathway and inhibition by UNC2025.

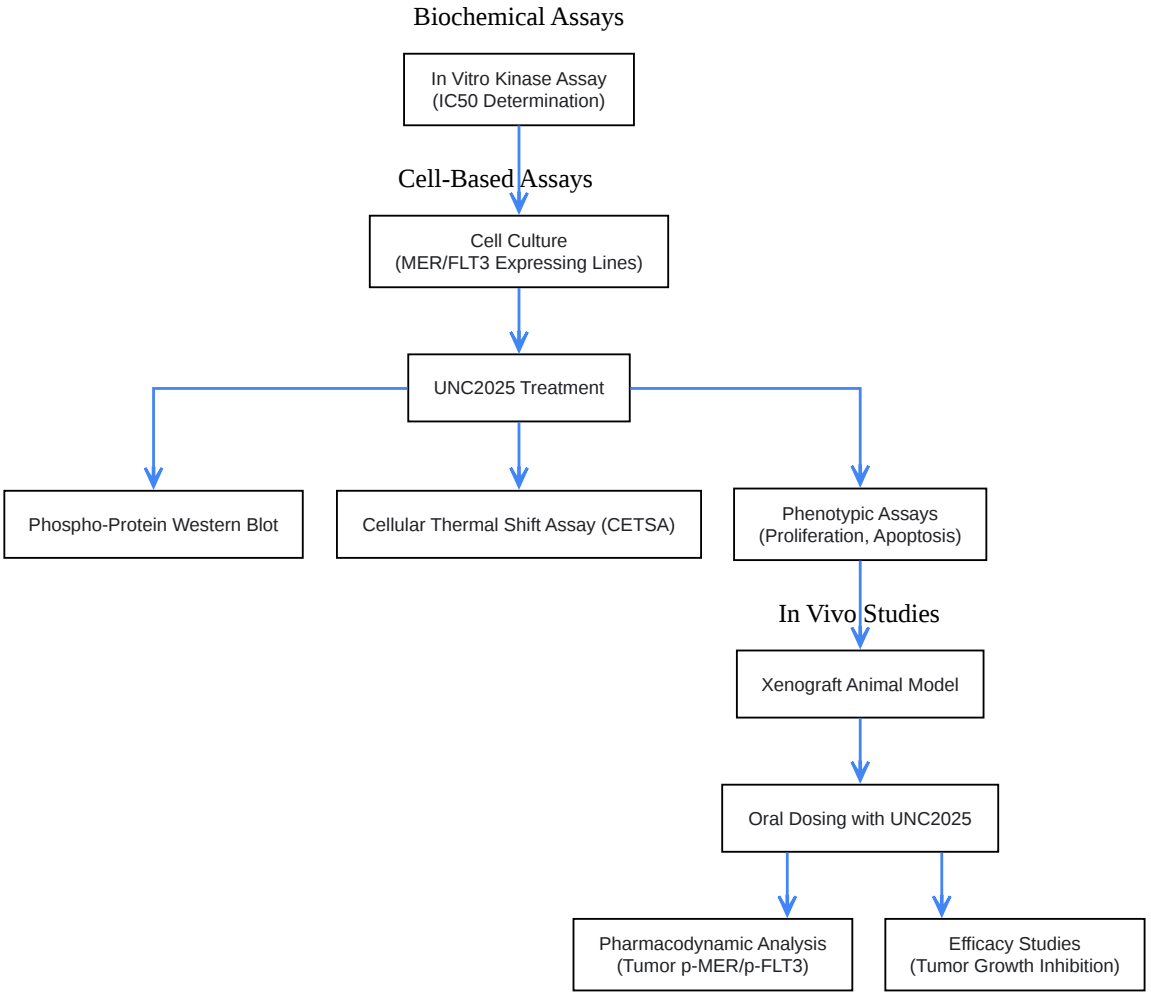

Click to download full resolution via product page

© 2026 BenchChem. All rights reserved.

Caption: Experimental workflow for UNC2025 target validation.



Click to download full resolution via product page

Caption: Logical comparison of UNC2025 with alternative inhibitors.

Conclusion

Validating the target engagement of **UNC2025 hydrochloride** is crucial for the accurate interpretation of experimental results and for advancing its development as a potential therapeutic agent. A combination of in vitro biochemical assays, cell-based target occupancy and downstream signaling analysis, and in vivo pharmacodynamic studies provides a robust framework for confirming that the observed biological effects of UNC2025 are a direct consequence of its interaction with MER and FLT3 kinases. This guide provides the necessary protocols and comparative data to aid researchers in this endeavor.

Need Custom Synthesis?

BenchChem offers custom synthesis for rare earth carbides and specific isotopiclabeling.

Email: info@benchchem.com or Request Quote Online.

References

- 1. selleckchem.com [selleckchem.com]
- 2. medchemexpress.com [medchemexpress.com]
- 3. medchemexpress.com [medchemexpress.com]
- 4. UNC2025, a MERTK small molecule inhibitor, is therapeutically effective alone and in combination with methotrexate in leukemia models - PMC [pmc.ncbi.nlm.nih.gov]

- 5. UNC2025, a Potent and Orally Bioavailable MER/FLT3 Dual Inhibitor - PMC [pmc.ncbi.nlm.nih.gov]
- 6. UNC2025, a potent and orally bioavailable MER/FLT3 dual inhibitor - PubMed [pubmed.ncbi.nlm.nih.gov]
- 7. The small molecule MERTK inhibitor UNC2025 decreases platelet activation and prevents thrombosis - PMC [pmc.ncbi.nlm.nih.gov]
- 8. SmallMolecules.com | UNC2025 hydrochloride (1 mg) from targetmol | SmallMolecules.com [smallmolecules.com]
- 9. The cellular thermal shift assay for evaluating drug target interactions in cells - PubMed [pubmed.ncbi.nlm.nih.gov]
- 10. Real-Time Cellular Thermal Shift Assay to Monitor Target Engagement - PMC [pmc.ncbi.nlm.nih.gov]
- 11. researchgate.net [researchgate.net]
- To cite this document: BenchChem. [A Comparative Guide to Validating UNC2025 Hydrochloride Target Engagement]. BenchChem, [2026]. [Online PDF]. Available at: [https://www.benchchem.com/product/b2484027/docs#a-comparative-guide-to-validating-unc2025-hydrochloride-target-engagement]

Disclaimer & Data Validity:

The information provided in this document is for Research Use Only (RUO) and is strictly not intended for diagnostic or therapeutic procedures. While BenchChem strives to provide accurate protocols, we make no warranties, express or implied, regarding the fitness of this product for every specific experimental setup.

Technical Support: The protocols provided are for reference purposes. Unsure if this reagent suits your experiment?

Need Industrial/Bulk Grade? Request Custom Synthesis Quote

© 2026 BenchChem. All rights reserved.

BenchChem

Our mission is to be the trusted global source of essential and advanced chemicals, empowering scientists and researchers to drive progress in science and industry.

Contact

Address: 3281 E Guasti Rd

Ontario, CA 91761, United States

Phone: (601) 213-4426

Email: info@benchchem.com

Contact our Ph.D. Support Team for a compatibility check

© 2026 BenchChem. All rights reserved.