Application Notes & Protocols: 3-Methyl-8-nitroquinoline in Materials Science

Author: BenchChem Technical Support Team. **Date**: May 2026

Compound of Interest

Compound Name:	*3-Methyl-8-nitroquinoline*
CAS No.:	*2801-32-3*
Cat. No.:	*B2461559*

Get Quote

Prepared for: Researchers, scientists, and drug development professionals.

Introduction: Unveiling the Potential of a Functionalized Quinoline

3-Methyl-8-nitroquinoline is a heterocyclic aromatic compound that, while not extensively studied in materials science to date, presents significant opportunities based on the well-established properties of its parent molecule, quinoline, and its functional groups. The quinoline core offers a rigid, planar structure with π-conjugated electrons, making it a promising candidate for applications in organic electronics.[1] The electron-withdrawing nitro group and the electron-donating methyl group introduce specific electronic and steric effects that can be harnessed to tune the material's properties for various applications.

These application notes will provide a comprehensive guide to the synthesis, characterization, and potential applications of **3-Methyl-8-nitroquinoline** in materials science, with a focus on its use as a corrosion inhibitor, in organic electronics, and in chemical sensing. The protocols provided are based on established methodologies for analogous quinoline derivatives and are designed to be a starting point for further research and development.

© 2026 BenchChem. All rights reserved.

Physicochemical Properties and Safety Considerations

A thorough understanding of the physicochemical properties and safety profile of **3-Methyl-8-nitroquinoline** is essential before its use in any application.

Table 1: Physicochemical Properties of **3-Methyl-8-nitroquinoline** and Related Compounds

Compound	Molecular Formula	Molecular Weight (g/mol)	Melting Point (°C)	Boiling Point (°C)
3-Methyl-8-nitroquinoline	$C_{10}H_8N_2O_2$	188.18	110-111[2]	338.7 (Predicted) [2]
8-Nitroquinoline	$C_9H_6N_2O_2$	174.16	89-91[3]	Decomposes[4]
6-Methyl-8-nitroquinoline	$C_{10}H_8N_2O_2$	188.18	Not Available	Not Available
7-Methyl-8-nitroquinoline	$C_{10}H_8N_2O_2$	188.18	Not Available	Not Available

Safety and Handling:

Nitroquinoline compounds should be handled with care, as they can be harmful if swallowed, inhaled, or in contact with skin.[4] It is also suspected that some nitroquinolines may have carcinogenic properties.[4] Appropriate personal protective equipment (PPE), including gloves, safety glasses, and a lab coat, should be worn at all times. All work should be conducted in a well-ventilated fume hood. For detailed safety information, refer to the Material Safety Data Sheet (MSDS) for 8-nitroquinoline and other related compounds.[5][6][7]

Synthesis and Characterization of **3-Methyl-8-nitroquinoline**

The synthesis of **3-Methyl-8-nitroquinoline** can be approached through a multi-step process, adapting established methods for quinoline derivatization.

© 2026 BenchChem. All rights reserved.

Proposed Synthesis Workflow



Click to download full resolution via product page

Caption: Proposed workflow for the synthesis and characterization of **3-Methyl-8-nitroquinoline**.

Protocol 1: Synthesis of 3-Methyl-8-nitroquinoline

Rationale: This protocol adapts the Doebner-von Miller reaction for the synthesis of the 3-methylquinoline precursor, followed by a standard nitration procedure. The Doebner-von Miller reaction is a versatile method for synthesizing quinolines from α,β-unsaturated carbonyl compounds and anilines.[8] Nitration of the quinoline ring typically occurs at the 5- and 8-positions, and the directing effects of the methyl group will influence the final product distribution.[9]

Materials:

- Aniline
- Crotonaldehyde
- Concentrated Hydrochloric Acid (HCl)

© 2026 BenchChem. All rights reserved.

- Concentrated Nitric Acid (HNO_3)
- Concentrated Sulfuric Acid (H_2SO_4)
- Sodium Bicarbonate ($NaHCO_3$) solution
- Dichloromethane (CH_2Cl_2)
- Anhydrous Magnesium Sulfate ($MgSO_4$)
- Silica gel for column chromatography
- Hexane and Ethyl Acetate for elution

Procedure:

Part A: Synthesis of 3-Methylquinoline

- In a round-bottom flask, cautiously add concentrated HCl to aniline with cooling in an ice bath.
- Slowly add crotonaldehyde to the mixture with continuous stirring.
- Heat the reaction mixture under reflux for 4-6 hours. Monitor the reaction progress using Thin Layer Chromatography (TLC).
- After completion, cool the mixture and neutralize with a saturated $NaHCO_3$ solution until the pH is approximately 8.
- Extract the aqueous layer with dichloromethane (3 x 50 mL).
- Combine the organic layers, dry over anhydrous $MgSO_4$, filter, and evaporate the solvent under reduced pressure to obtain crude 3-methylquinoline.
- Purify the crude product by vacuum distillation or column chromatography.

Part B: Nitration of 3-Methylquinoline

© 2026 BenchChem. All rights reserved.

- In a three-necked flask equipped with a dropping funnel and a thermometer, dissolve the purified 3-methylquinoline in concentrated H_2SO_4 at 0 °C.
- Slowly add a pre-cooled mixture of concentrated HNO_3 and H_2SO_4 dropwise, maintaining the temperature below 5 °C.
- After the addition is complete, allow the mixture to stir at room temperature for 2-3 hours.
- Pour the reaction mixture onto crushed ice and neutralize carefully with a saturated $NaHCO_3$ solution.
- Collect the precipitated solid by filtration, wash with cold water, and dry.
- Purify the crude **3-Methyl-8-nitroquinoline** by column chromatography using a hexane:ethyl acetate gradient.

Protocol 2: Characterization of 3-Methyl-8-nitroquinoline

Rationale: A combination of spectroscopic and analytical techniques is necessary to confirm the structure and purity of the synthesized compound.

Techniques:

- Nuclear Magnetic Resonance (NMR) Spectroscopy: ^1H and ^{13}C NMR are used to elucidate the molecular structure by identifying the chemical environment of the hydrogen and carbon atoms.
- Infrared (IR) Spectroscopy: IR spectroscopy helps in identifying the functional groups present in the molecule, particularly the characteristic stretching frequencies of the nitro group (typically around 1550-1500 cm^{-1} and 1360-1300 cm^{-1}).[10]
- Mass Spectrometry (MS): MS provides information about the molecular weight and fragmentation pattern of the compound, confirming its identity.
- Single-Crystal X-ray Diffraction (XRD): If suitable single crystals can be grown, XRD provides the definitive three-dimensional structure of the molecule.[11]

© 2026 BenchChem. All rights reserved.

Application in Corrosion Inhibition

Quinoline and its derivatives are effective corrosion inhibitors for various metals in acidic media due to the presence of the nitrogen heteroatom and the planar aromatic rings, which facilitate adsorption onto the metal surface.[12][13] The nitro group, being electron-withdrawing, can enhance the adsorption process.

Protocol 3: Evaluation of Corrosion Inhibition Performance

Rationale: Electrochemical techniques such as potentiodynamic polarization and electrochemical impedance spectroscopy (EIS) are powerful methods to evaluate the efficiency of a corrosion inhibitor. These methods provide insights into the inhibition mechanism (anodic, cathodic, or mixed-type) and the kinetics of the corrosion process.

Materials:

- Mild steel coupons
- 1 M Hydrochloric acid (HCl) solution
- **3-Methyl-8-nitroquinoline** (inhibitor)
- Potentiostat/Galvanostat
- Three-electrode electrochemical cell (working electrode: mild steel coupon, counter electrode: platinum wire, reference electrode: saturated calomel electrode - SCE)

Procedure:

- Prepare mild steel coupons by polishing with different grades of emery paper, degreasing with acetone, and drying.
- Prepare a series of 1 M HCl solutions containing different concentrations of **3-Methyl-8-nitroquinoline** (e.g., 0.1 mM, 0.5 mM, 1 mM, 5 mM). A blank solution (1 M HCl without inhibitor) should also be prepared.

© 2026 BenchChem. All rights reserved.

- Assemble the three-electrode cell with the prepared mild steel coupon as the working electrode.
- Potentiodynamic Polarization:
  - Allow the open circuit potential (OCP) to stabilize for 30-60 minutes.
  - Scan the potential from -250 mV to +250 mV versus OCP at a scan rate of 1 mV/s.
  - Plot the resulting polarization curve (log(current density) vs. potential).
  - Determine the corrosion potential (Ecorr), corrosion current density (icorr), and Tafel slopes.
- Electrochemical Impedance Spectroscopy (EIS):
  - Perform EIS measurements at the OCP over a frequency range of 100 kHz to 0.01 Hz with a small amplitude AC signal (e.g., 10 mV).
  - Plot the Nyquist and Bode plots.
  - Model the impedance data using an appropriate equivalent circuit to determine the charge transfer resistance (Rct) and double-layer capacitance (Cdl).

Data Analysis:

The inhibition efficiency (IE%) can be calculated from both potentiodynamic polarization and EIS data:

- From polarization data: IE% = [(i_corr(blank) - i_corr(inhibitor)) / i_corr(blank)] * 100
- From EIS data: IE% = [(R_ct(inhibitor) - R_ct(blank)) / R_ct(inhibitor)] * 100

Application in Organic Electronics

The π-conjugated system of the quinoline ring suggests that **3-Methyl-8-nitroquinoline** could be explored as a material for organic electronic devices. The electron-withdrawing nitro group may impart n-type semiconductor characteristics.

© 2026 BenchChem. All rights reserved.

Protocol 4: Fabrication and Characterization of an Organic Thin-Film Transistor (OTFT)

Rationale: The fabrication of a simple bottom-gate, top-contact OTFT allows for the evaluation of the semiconductor properties of **3-Methyl-8-nitroquinoline**, including its charge carrier mobility and on/off ratio.

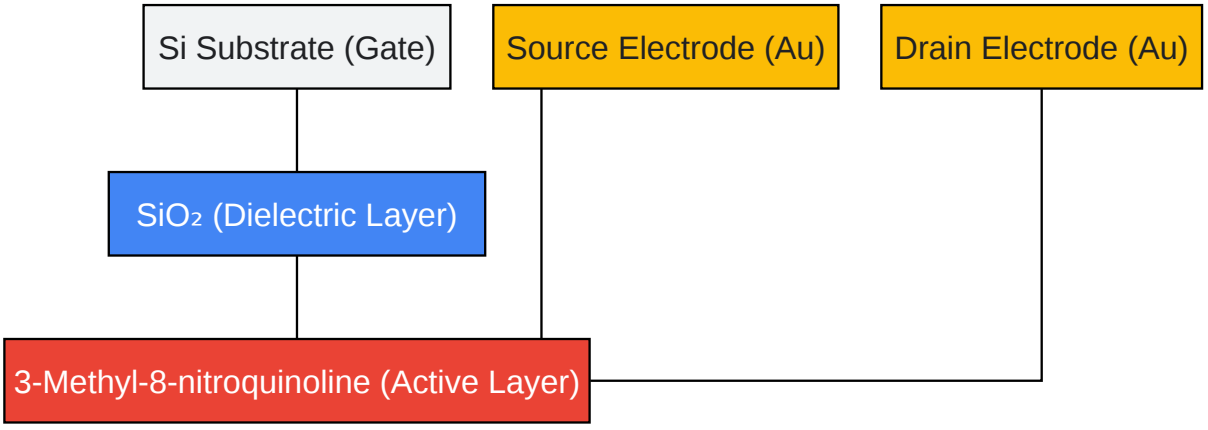

Click to download full resolution via product page

Caption: Structure of a bottom-gate, top-contact Organic Thin-Film Transistor (OTFT).

Materials:

- Highly doped n-type silicon wafer with a thermally grown SiO_2 layer
- **3-Methyl-8-nitroquinoline**
- High-purity solvent (e.g., toluene or chlorobenzene)
- Gold (Au) for source and drain electrodes
- Spin coater
- Thermal evaporator
- Semiconductor parameter analyzer

© 2026 BenchChem. All rights reserved.

Procedure:

- Clean the Si/SiO_2 substrate by ultrasonication in acetone and isopropanol, followed by oxygen plasma treatment.
- Prepare a solution of **3-Methyl-8-nitroquinoline** in the chosen solvent (e.g., 5-10 mg/mL).
- Deposit a thin film of the **3-Methyl-8-nitroquinoline** solution onto the SiO_2 surface using spin coating.
- Anneal the film at a suitable temperature (e.g., 80-100 °C) to remove residual solvent and improve film morphology.
- Deposit the source and drain electrodes (typically gold) through a shadow mask using thermal evaporation.
- Characterize the electrical properties of the OTFT using a semiconductor parameter analyzer in a probe station. Measure the output and transfer characteristics.

Data Analysis:

From the transfer characteristics, the field-effect mobility (μ) and the on/off ratio can be calculated.

Application in Chemical Sensing

The nitrogen atom in the quinoline ring and the potential for the nitro group to participate in charge-transfer interactions make **3-Methyl-8-nitroquinoline** a candidate for the development of chemical sensors, particularly for the detection of metal ions or electron-deficient analytes.

Protocol 5: Fabrication of a Modified Electrode for Electrochemical Sensing

Rationale: Modifying the surface of an electrode with **3-Methyl-8-nitroquinoline** can introduce specific recognition capabilities. This protocol describes a simple drop-casting method to create a modified electrode for investigating its sensing properties towards a target analyte.

Materials:

© 2026 BenchChem. All rights reserved.

- Glassy carbon electrode (GCE)
- **3-Methyl-8-nitroquinoline**
- Solvent (e.g., N,N-Dimethylformamide - DMF)
- Target analyte solution (e.g., a metal salt solution)
- Supporting electrolyte (e.g., 0.1 M KCl)
- Electrochemical workstation

Procedure:

- Polish the GCE with alumina slurry, then sonicate in ethanol and deionized water.
- Prepare a dilute solution of **3-Methyl-8-nitroquinoline** in DMF (e.g., 1 mg/mL).
- Drop-cast a small volume (e.g., 5-10 µL) of the solution onto the GCE surface and allow the solvent to evaporate at room temperature.
- Using the modified GCE as the working electrode, perform cyclic voltammetry (CV) or differential pulse voltammetry (DPV) in the supporting electrolyte.
- Record the electrochemical response in the presence of increasing concentrations of the target analyte.

Data Analysis:

A change in the electrochemical signal (e.g., peak current or potential) upon addition of the analyte indicates a sensing response. A calibration curve can be constructed by plotting the change in signal versus the analyte concentration to determine the sensitivity and limit of detection.

Conclusion

While **3-Methyl-8-nitroquinoline** is a relatively unexplored compound in materials science, its chemical structure suggests a range of promising applications. By leveraging the known

© 2026 BenchChem. All rights reserved.

properties of related quinoline derivatives, researchers can use the protocols outlined in these application notes as a foundation for investigating its potential as a corrosion inhibitor, an organic semiconductor, and a chemical sensor. The interplay of the quinoline core with the methyl and nitro substituents provides a rich area for further scientific inquiry and material design.

References

- PubChem. 8-Nitroquinoline. National Center for Biotechnology Information. [Link]
- Embracing Innovation: The Future Applications of Best 8 Hydroxy 5 Nitroquinoline in Global Industries. [Link]
- PubChem. 4-Nitroquinoline 1-Oxide. National Center for Biotechnology Information. [Link]
- ResearchGate. Spectroscopic characterization of 8-hydroxy-5-nitroquinoline and 5-chloro-8-hydroxy quinoline and investigation of its reactive properties by DFT calculations and molecular dynamics simulations. [Link]
- PMC. Nanomaterial assisted bulk scale synthesis of 2-methyl-6-nitroquinoline. [Link]
- Scirp.org. Growth and Characterization of 8-Hydroxy Quinoline Nitrobenzoate. [Link]
- LookChem. **3-METHYL-8-NITROQUINOLINE**. [Link]
- ResearchGate. 8-Nitroquinoline. [Link]
- Brieflands. An Efficient Two-step Selective Synthesis of 7-Methyl-8-nitroquinoline From m-Toluidine as a Key Starting Material in Medicinal Chemistry. [Link]
- PrepChem.com. Preparation of 8-nitroquinoline. [Link]
- PMC. Chemistry of Nitroquinolones and Synthetic Application to Unnatural 1-Methyl-2-quinolone Derivatives. [Link]
- IIP Series. SYNTHESIS OF QUINOLINE AND ITS DERIVATIVES USING VARIOUS NAME REACTIONS: AN OVERVIEW. [Link]

© 2026 BenchChem. All rights reserved.

- SciSpace. Synthesis of derivatives of quinoline. [Link]
- MDPI. Chemistry of Nitroquinolones and Synthetic Application to Unnatural 1-Methyl-2-quinolone Derivatives. [Link]
- Ingenta Connect. 8–Hydroxyquinoline is key to the development of corrosion inhibitors: An advanced review. [Link]
- Google Patents. Separation of 5-nitroquinoline and 8-nitroquinoline.
- ACS Publications. meta-Nitration of Pyridines and Quinolines through Oxazino Azines. [Link]
- RSC Publishing. A highly stable 8-hydroxyquinolinate-based metal–organic framework as a selective fluorescence sensor for Fe3+, Cr2O72− and nitroaromatic explosives. [Link]
- OEM. 8 Hydroxyquinoline for Effective Corrosion Inhibition Solutions. [Link]
- RSC Publishing. Corrosion inhibition performance of newly synthesized 5-alkoxymethyl-8-hydroxyquinoline derivatives for carbon steel in 1 M HCl solution: experimental, DFT and Monte Carlo simulation studies. [Link]
- ResearchGate. Organic materials for organic electronic devices. [Link]
- PMC. Recent Trends in Chemical Sensors for Detecting Toxic Materials. [Link]
- PubChem. 6-Methyl-8-nitroquinoline. National Center for Biotechnology Information. [Link]

Need Custom Synthesis?

BenchChem offers custom synthesis for rare earth carbides and specific isotopiclabeling.

Email: info@benchchem.com or Request Quote Online.

Sources

- 1. researchgate.net [researchgate.net]
- 2. lookchem.com [lookchem.com]
- 3. 8-Nitroquinoline 98 607-35-2 [sigmaaldrich.com]

- 4. 8-Nitroquinoline | C9H6N2O2 | CID 11830 - PubChem [pubchem.ncbi.nlm.nih.gov]
- 5. sigmaaldrich.com [sigmaaldrich.com]
- 6. datasheets.scbt.com [datasheets.scbt.com]
- 7. Report | CAMEO Chemicals | NOAA [cameochemicals.noaa.gov]
- 8. iipseries.org [iipseries.org]
- 9. EP0858998A1 - Separation of 5-nitroquinoline and 8-nitroquinoline - Google Patents [patents.google.com]
- 10. benchchem.com [benchchem.com]
- 11. researchgate.net [researchgate.net]
- 12. researchgate.net [researchgate.net]
- 13. Corrosion inhibition performance of newly synthesized 5-alkoxymethyl-8-hydroxyquinoline derivatives for carbon steel in 1 M HCl solution: experimental, DFT and Monte Carlo simulation studies - Physical Chemistry Chemical Physics (RSC Publishing) [pubs.rsc.org]

- To cite this document: BenchChem. [Application Notes & Protocols: 3-Methyl-8-nitroquinoline in Materials Science]. BenchChem, [2026]. [Online PDF]. Available at: [https://www.benchchem.com/product/b2461559/docs#application-notes-protocols-3-methyl-8-nitroquinoline-in-materials-science]

Disclaimer & Data Validity:

The information provided in this document is for Research Use Only (RUO) and is strictly not intended for diagnostic or therapeutic procedures. While BenchChem strives to provide accurate protocols, we make no warranties, express or implied, regarding the fitness of this product for every specific experimental setup.

Technical Support: The protocols provided are for reference purposes. Unsure if this reagent suits your experiment?

Need Industrial/Bulk Grade? Request Custom Synthesis Quote

BenchChem

Our mission is to be the trusted global source of essential and advanced chemicals, empowering scientists and researchers to drive progress in science and industry.

Contact

Address: 3281 E Guasti Rd

Ontario, CA 91761, United States

Phone: (601) 213-4426

Email: info@benchchem.com

Contact our Ph.D. Support Team for a compatibility check

© 2026 BenchChem. All rights reserved.