Application Note: Chemoselective N-Protection of (2-Methylazetidin-2-yl)methanol

Author: BenchChem Technical Support Team. **Date**: April 2026

Compound of Interest

Compound Name:	*(2-Methylazetidin-2-yl)methanol*
CAS No.:	*1314951-93-3*
Cat. No.:	*B2450256*

Get Quote

Target Audience: Researchers, synthetic chemists, and drug development professionals.

Executive Summary

(2-Methylazetidin-2-yl)methanol is a highly valuable, sp^3-rich heterocyclic scaffold utilized in modern medicinal chemistry to rigidify molecular conformations and improve the pharmacokinetic profiles of drug candidates. However, the inherent ~26 kcal/mol ring strain of the azetidine core makes it highly susceptible to acid-mediated ring-opening and nucleophilic degradation ()[1]. This application note details a field-proven, self-validating protocol for the chemoselective N-tert-butyloxycarbonyl (Boc) protection of **(2-Methylazetidin-2-yl)methanol**, ensuring high yields while preserving the integrity of the strained four-membered ring and the unhindered primary alcohol ()[2].

Mechanistic Rationale & Chemoselectivity

The C2 position of **(2-Methylazetidin-2-yl)methanol** features a highly congested steric environment, bearing a methyl group, a hydroxymethyl group, the ring nitrogen, and the C3 methylene. This steric bulk significantly impedes the nucleophilicity of the secondary amine compared to an unsubstituted azetidine.

© 2026 BenchChem. All rights reserved.

Despite this hindrance, the nitrogen remains inherently more nucleophilic than the adjacent primary alcohol. The critical causality in achieving chemoselectivity is the strict exclusion of hypernucleophilic catalysts such as DMAP (4-Dimethylaminopyridine). DMAP rapidly reacts with Boc_2O to form a highly reactive Boc-pyridinium intermediate. Because this intermediate is highly electrophilic, the unhindered primary alcohol will attack it preferentially over the sterically hindered secondary amine, leading to unwanted O-acylation (O-Boc) or N,O-di-Boc formation.

By relying solely on a mild, sterically bulky base (DIPEA) and strict stoichiometric control of Boc_2O, the reaction is kinetically driven toward exclusive N-protection. Furthermore, the installation of the electron-withdrawing Boc group stabilizes the electron-rich nitrogen, preventing unwanted electrocyclic ring-opening during downstream transformations ()[3].

Comparative Protecting Group Strategy

Selecting the appropriate protecting group is dictated by downstream synthetic requirements and the fragility of the azetidine ring ()[4]. The quantitative data below summarizes the efficacy of various protecting groups for this specific scaffold.

Protecting Group	Reagent	Base / Solvent	Est. Yield	Chemoselectivity (N vs O)	Deprotection Conditions
Boc	Boc_2O (1.05 eq)	DIPEA / DCM	85–92%	Excellent (without DMAP)	TFA/DCM or 4M HCl in Dioxane
Cbz	Cbz-Cl (1.1 eq)	$NaHCO_3$ / THF-H_2O	75–80%	Moderate (O-acylation risk)	H_2, Pd/C or $Pd(OH)_2$
Fmoc	Fmoc-OSu (1.1 eq)	$NaHCO_3$ / Dioxane-H_2O	80–85%	Good	20% Piperidine in DMF
Tosyl	TsCl (1.1 eq)	Pyridine / DCM	60–70%	Poor (O-tosylation competes)	Na/NH_3 (liq) or SmI_2

© 2026 BenchChem. All rights reserved.

Experimental Workflow & Protocol

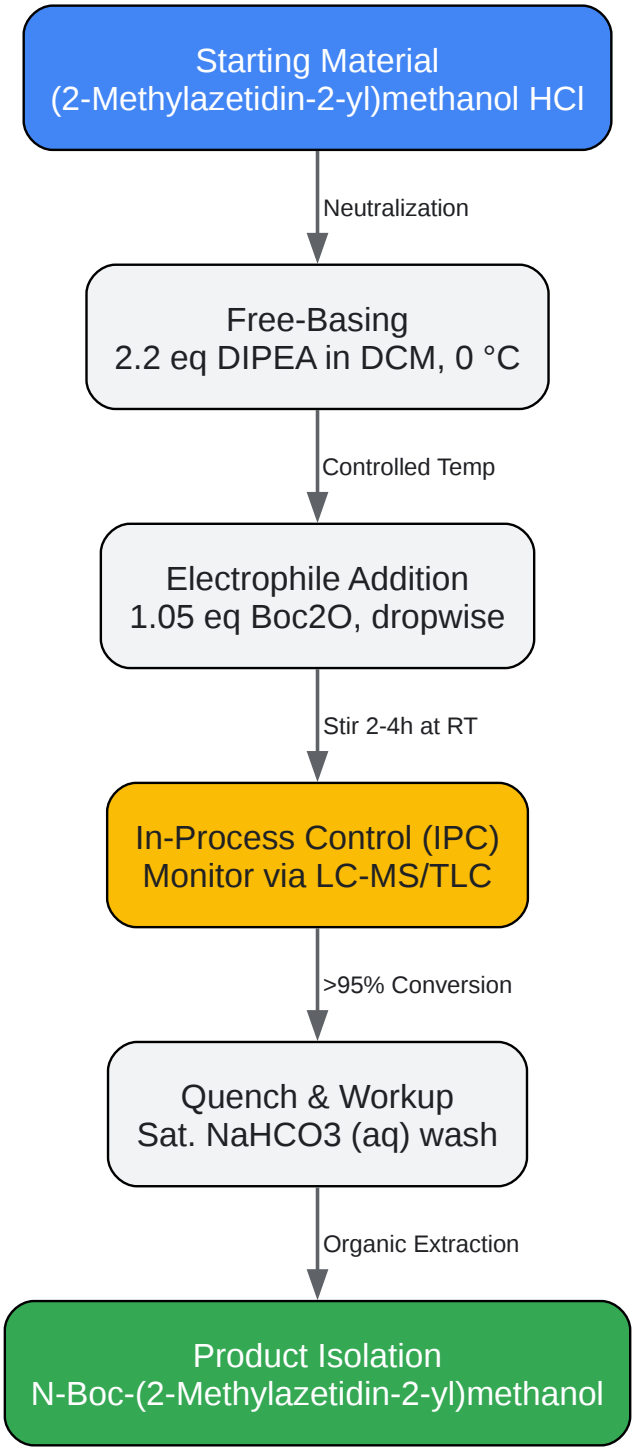

Click to download full resolution via product page

Chemoselective N-Boc protection workflow for **(2-Methylazetidin-2-yl)methanol**.

© 2026 BenchChem. All rights reserved.

Materials

- **(2-Methylazetidin-2-yl)methanol** hydrochloride (CAS: 2227204-97-7) ()[5]
- Di-tert-butyl dicarbonate (Boc_2O)
- N,N-Diisopropylethylamine (DIPEA)
- Dichloromethane (DCM), Anhydrous
- Saturated aqueous $NaHCO_3$, Brine
- Anhydrous Sodium Sulfate (Na_2SO_4)

Step-by-Step Methodology

- Free-Basing and Solvation: Suspend **(2-Methylazetidin-2-yl)methanol** hydrochloride (1.0 eq) in anhydrous DCM to achieve a 0.1 M concentration. Cool the suspension to 0 °C using an ice bath.
  - Causality: The starting material is typically supplied as an HCl salt to prevent spontaneous polymerization. Cooling minimizes exothermic degradation pathways during the subsequent neutralization step.
- Base Addition: Add DIPEA (2.2 eq) dropwise to the cooled suspension.
  - Causality: Exactly 1.0 eq of DIPEA is consumed to neutralize the HCl salt, liberating the free amine. The remaining 1.2 eq acts as the acid scavenger for the protection step. DIPEA is selected over Triethylamine (Et_3N) because its higher steric bulk prevents it from acting as a competing nucleophile.
- Electrophile Introduction: Dissolve Boc_2O (1.05 eq) in a minimal amount of anhydrous DCM and add it dropwise to the reaction mixture at 0 °C.
  - Causality: Strict stoichiometric control (1.05 eq) is paramount. Excess Boc_2O will inevitably lead to over-protection of the primary alcohol.

© 2026 BenchChem. All rights reserved.

- Reaction Propagation & In-Process Control (IPC): Remove the ice bath and allow the reaction to warm to room temperature. Stir for 2–4 hours. Monitor the reaction via TLC (using a Ninhydrin stain) or LC-MS.
  - Self-Validating Step: The starting secondary amine will show a positive (purple/pink) ninhydrin reaction. As the N-Boc product forms, the nitrogen loses its basicity and will no longer stain with ninhydrin, providing a clear, binary visual validation of reaction completion.
- Quench and Workup: Quench the reaction by adding an equal volume of saturated aqueous $NaHCO_3$. Extract the aqueous layer with DCM (3x). Wash the combined organic layers with brine.
  - Causality: Azetidines are highly sensitive to acid-mediated ring opening. Using $NaHCO_3$ ensures the aqueous phase remains slightly basic (pH ~8), validating that acid-catalyzed degradation cannot occur during the isolation phase.
- Isolation: Dry the combined organic layers over anhydrous Na_2SO_4, filter, and concentrate under reduced pressure. Purify via silica gel flash chromatography (Hexanes/EtOAc gradient) to yield pure (R)-1-Boc-2-Azetidinemethanol (CAS: 161511-90-6) ()[6].

Troubleshooting & Process Optimization

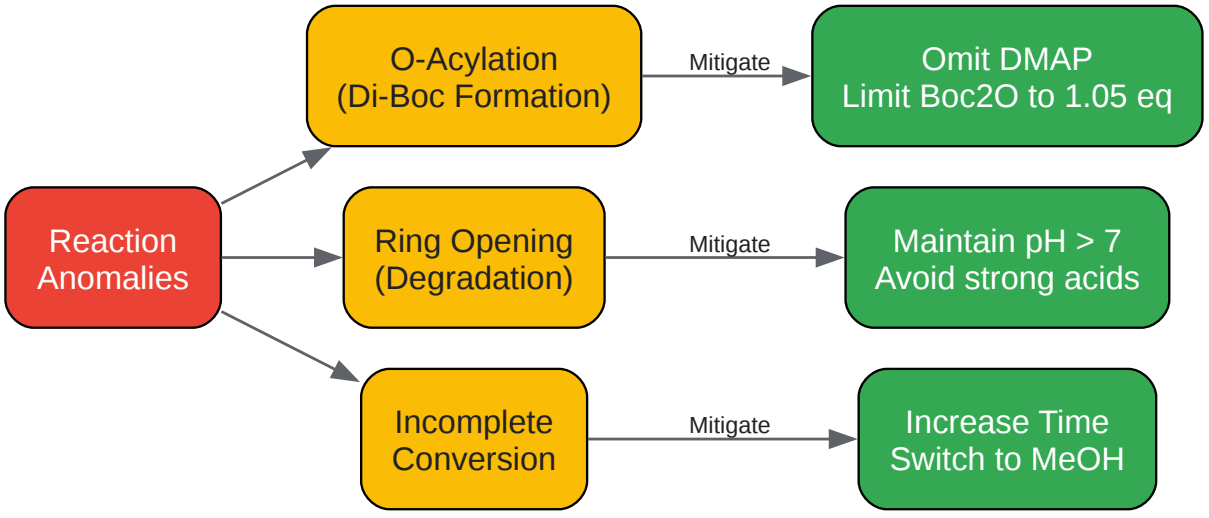

© 2026 BenchChem. All rights reserved.

Click to download full resolution via product page

Troubleshooting logic for common anomalies in azetidine N-protection.

If incomplete conversion is observed due to the severe steric hindrance at the C2 position, do not increase the temperature, as heating strained heterocycles promotes decomposition ()[4]. Instead, switch the solvent from DCM to Methanol (MeOH). Protic solvents can enhance the electrophilicity of Boc_2O via hydrogen bonding, safely accelerating the reaction without compromising the azetidine core.

References

- Recent Advances in the Synthesis and Reactivity of Azetidines: Strain-Driven Character of the Four-Membered Heterocycle Source: RSC Publishing (Chemical Society Reviews) URL: [Link]
- Generation and Electrophile Trapping of N-Boc-2-lithio-2-azetine Source: ACS Publications (Organic Letters) URL:[Link]

Need Custom Synthesis?

BenchChem offers custom synthesis for rare earth carbides and specific isotopiclabeling.

Email: info@benchchem.com or Request Quote Online.

Sources

- 1. pubs.rsc.org [pubs.rsc.org]
- 2. pdf.benchchem.com [pdf.benchchem.com]
- 3. pubs.acs.org [pubs.acs.org]
- 4. pdf.benchchem.com [pdf.benchchem.com]
- 5. fluorochem.co.uk [fluorochem.co.uk]
- 6. fluorochem.co.uk [fluorochem.co.uk]
- To cite this document: BenchChem. [Application Note: Chemoselective N-Protection of (2-Methylazetidin-2-yl)methanol]. BenchChem, [2026]. [Online PDF]. Available at:

[https://www.benchchem.com/product/b2450256/docs#application-note-chemoselective-n-protection-of-2-methylazetidin-2-yl-methanol]

Disclaimer & Data Validity:

The information provided in this document is for Research Use Only (RUO) and is strictly not intended for diagnostic or therapeutic procedures. While BenchChem strives to provide accurate protocols, we make no warranties, express or implied, regarding the fitness of this product for every specific experimental setup.

Technical Support: The protocols provided are for reference purposes. Unsure if this reagent suits your experiment?

Need Industrial/Bulk Grade? Request Custom Synthesis Quote

BenchChem

Our mission is to be the trusted global source of essential and advanced chemicals, empowering scientists and researchers to drive progress in science and industry.

Contact

Address: 3281 E Guasti Rd

Ontario, CA 91761, United States

Phone: (601) 213-4426

Email: info@benchchem.com

Contact our Ph.D. Support Team for a compatibility check

© 2026 BenchChem. All rights reserved.