Technical Guide: Optimizing Yield for Tert-butyl 2-(tert-butoxy)acetate Synthesis

Author: BenchChem Technical Support Team. **Date**: May 2026

Compound of Interest

Compound Name:	*Tert-butyl 2-(tert-butoxy)acetate*
CAS No.:	*55666-48-3*
Cat. No.:	*B2441515*

Get Quote

Subject: Yield Improvement & Troubleshooting for CAS [Relevant Analogues/Derivatives]
Target Molecule: **Tert-butyl 2-(tert-butoxy)acetate** (

) Core Challenge: Overcoming steric hindrance and preventing acid-catalyzed hydrolysis/elimination during formation of the bulky di-tert-butyl motif.

Executive Summary: The Chemistry of Yield Loss

The synthesis of **Tert-butyl 2-(tert-butoxy)acetate** involves introducing two bulky tert-butyl groups onto the glycolic acid skeleton. Low yields are typically caused by three competing failure modes:

- Steric Hindrance: The nucleophilic attack of tert-butoxide on

  -halo esters (Williamson approach) is kinetically sluggish compared to elimination (E2) or transesterification.

- Acid Sensitivity: Both the tert-butyl ester and tert-butyl ether moieties are acid-labile. Trace acid during workup or improper catalyst neutralization will degrade the product back to glycolic acid or isobutylene.

© 2026 BenchChem. All rights reserved.

- Oligomerization: In isobutylene-mediated pathways, temperature mismanagement leads to diisobutylene formation (oligomerization) rather than product formation.

Strategic Pathways & Decision Matrix

Choose the protocol that matches your available equipment and scale.

Pathway A: Isobutylene Addition (High Yield / Industrial Standard)

Mechanism: Acid-catalyzed concomitant protection of hydroxyl and carboxyl groups. Best For: Scale-up (>10g), high-throughput, avoiding salt byproducts. Typical Yield: 85–95% (Optimized).

Pathway B: Williamson Ether Synthesis (Lab Scale / Common)

Mechanism:

displacement of bromide by potassium tert-butoxide. Best For: Small scale (<5g), when isobutylene gas handling is unavailable. Typical Yield: 40–60% (Unoptimized)

75% (Optimized).

Pathway Logic Diagram

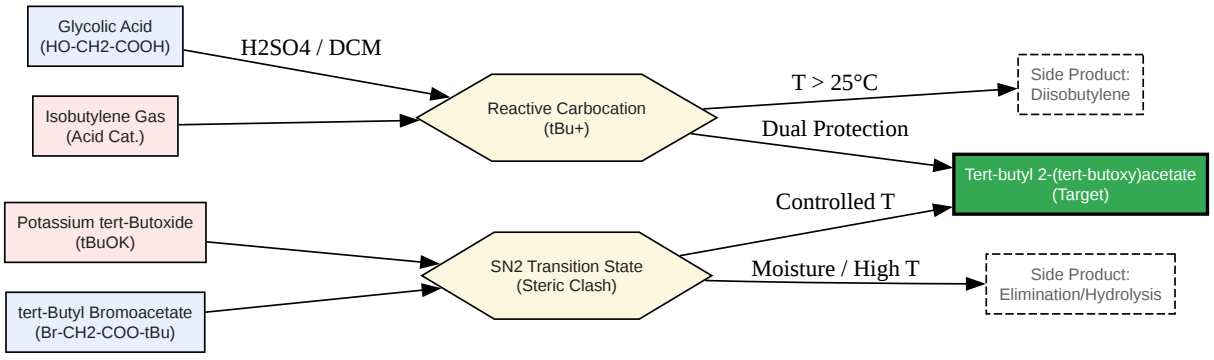

© 2026 BenchChem. All rights reserved.

Click to download full resolution via product page

Figure 1: Mechanistic pathways for synthesizing **Tert-butyl 2-(tert-butoxy)acetate**. Pathway A (top) dominates for yield, while Pathway B (bottom) is prone to steric issues.

Optimized Protocols

Protocol A: Isobutylene "One-Pot" Method (Recommended)

Reference Basis: Acid-catalyzed addition to hydroxy acids [1, 2].

Reagents:

- Glycolic Acid (dry, crystalline)
- Isobutylene gas (condensed) or liquid isobutylene equivalent
- Catalyst: Conc.

  or Amberlyst-15 (heterogeneous, easier workup)
- Solvent: Dichloromethane (DCM) or solvent-free (pressure vessel)

Step-by-Step Optimization:

- Vessel Prep: Use a pressure-rated glass reactor or autoclave. Cool to -10°C.
- Loading: Charge Glycolic Acid (1.0 equiv) and DCM (2 mL/g). Add catalyst (

  , 0.05 equiv).
- Isobutylene Addition: Condense Isobutylene (3.0–4.0 equiv) into the vessel at -10°C. Critical: Excess isobutylene drives the equilibrium and compensates for oligomerization.
- Reaction: Seal vessel. Allow to warm slowly to Room Temperature (20–25°C). Stir for 24–48 hours.[1]

© 2026 BenchChem. All rights reserved.

- Note: Do not heat above 30°C. Higher temperatures favor isobutylene dimerization (diisobutylene).

- Quench (Critical for Yield): Pour reaction mixture into a vigorously stirred solution of cold saturated

  .

  - Why? The product hydrolyzes rapidly in acidic media. The pH must be >7 immediately.

- Workup: Extract with Hexanes (improves separation from polymer byproducts). Wash with brine. Dry over

  (basic drying agent preferred over

).

- Purification: Vacuum distillation. Product is stable, but avoid prolonged heating.

Protocol B: Williamson Ether Synthesis (Troubleshooting Mode)

Reference Basis: Alkylation of alpha-halo esters [3, 4].

Reagents:

- tert-Butyl bromoacetate (1.0 equiv)
- Potassium tert-butoxide (

) (1.1 equiv)
- Solvent: Anhydrous THF or DMF (DMF increases yield but complicates workup)

Optimization Guide:

- Temperature Control: Start at 0°C. Add

  solution slowly to the bromoacetate.

© 2026 BenchChem. All rights reserved.

- Counter-intuitive Insight: While heating usually helps

  , here it promotes E2 elimination. Keep it cold to favor substitution.

- Solvent Effect: If yield is <50% in THF, switch to DMF or DMSO. The polar aprotic nature stabilizes the transition state for the bulky nucleophile.

- Moisture:

  is extremely hygroscopic. If it contains KOH (from moisture), you will hydrolyze the ester. Use sublimed grade

  or fresh solution.

Troubleshooting & FAQ

Yield Loss Diagnosis Table

Symptom	Probable Cause	Corrective Action
Low Conversion (<30%)	Steric hindrance (Pathway B) or insufficient pressure (Pathway A).	Path A: Increase isobutylene equivalents (4.0 eq) and reaction time. Path B: Switch solvent to DMF; add catalytic KI (Finkelstein condition).
Product Disappears during Workup	Acid hydrolysis.	Critical: Ensure quench buffer is pH 8-9. Use as drying agent. Avoid silica gel chromatography (acidic) unless neutralized with 1% .
Oily/Polymeric Residue	Isobutylene oligomerization.	Maintain reaction temp < 25°C. Reduce acid catalyst loading.
Starting Material Recovery	Moisture in reagents (Pathway B).	Dry solvent over molecular sieves (3Å). Use fresh from a sealed ampoule.

© 2026 BenchChem. All rights reserved.

Frequently Asked Questions

Q: Can I use tert-butyl chloroacetate instead of bromoacetate? A: No. The chloride is a poorer leaving group. With the bulky tert-butoxide nucleophile, the reaction rate will be negligible, leading to decomposition before substitution. If you must use chloride, add 1.0 equiv of NaI to generate the iodide in situ.

Q: Why do I see glycolic acid after column chromatography? A: Silica gel is slightly acidic. The di-tert-butyl acetal/ester motif is acid-sensitive.

- Fix: Pre-treat the silica column with 1% Triethylamine (TEA) in Hexanes before loading your sample. Or, purify by vacuum distillation (bp ~75-80°C at high vacuum) which is often cleaner and higher yielding.

Q: Is the product stable for storage? A: Yes, if stored neat at 4°C. However, it will hydrolyze in solution if the solvent becomes acidic over time (e.g., old chloroform). Store over a pellet of KOH or molecular sieves to ensure stability.

References

- Organic Syntheses, Coll. Vol. 4, p. 261 (1963); Vol. 33, p. 29 (1953). Acid-catalyzed addition of isobutylene to carboxylic acids.
- Greene, T.W., Wuts, P.G.M.Protective Groups in Organic Synthesis. Wiley-Interscience.[2] (Standard reference for tert-butyl ester/ether formation conditions).
- Journal of Organic Chemistry, Alkylation of esters using potassium tert-butoxide. (General mechanism for sterically hindered ethers).
- Org. Process Res. Dev.Scalable synthesis of tert-butyl esters.

(Note: Specific CAS 20445-31-2 in some databases refers to a Mosher acid derivative; ensure confirmation of structure

by NMR:

ppm (two singlets, 18H),

ppm (singlet, 2H)).

© 2026 BenchChem. All rights reserved.

Need Custom Synthesis?

BenchChem offers custom synthesis for rare earth carbides and specific isotopiclabeling.

Email: info@benchchem.com or Request Quote Online.

Sources

- 1. Organic Syntheses Procedure [orgsyn.org]
- 2. tert-Butyl Esters [organic-chemistry.org]
- To cite this document: BenchChem. [Technical Guide: Optimizing Yield for Tert-butyl 2-(tert-butoxy)acetate Synthesis]. BenchChem, [2026]. [Online PDF]. Available at: [https://www.benchchem.com/product/b2441515/docs#technical-guide-optimizing-yield-for-tert-butyl-2-tert-butoxy-acetate-synthesis]

Disclaimer & Data Validity:

The information provided in this document is for Research Use Only (RUO) and is strictly not intended for diagnostic or therapeutic procedures. While BenchChem strives to provide accurate protocols, we make no warranties, express or implied, regarding the fitness of this product for every specific experimental setup.

Technical Support: The protocols provided are for reference purposes. Unsure if this reagent suits your experiment?

Need Industrial/Bulk Grade? Request Custom Synthesis Quote

BenchChem

Our mission is to be the trusted global source of essential and advanced chemicals, empowering scientists and researchers to drive progress in science and industry.

Contact

Address: 3281 E Guasti Rd

Ontario, CA 91761, United States

Phone: (601) 213-4426

Email: info@benchchem.com

Contact our Ph.D. Support Team for a compatibility check

© 2026 BenchChem. All rights reserved.