(D)-PPA 1: A Comparative Analysis of Immune Checkpoint Protein Cross-Reactivity

Author: BenchChem Technical Support Team. **Date**: April 2026

Compound of Interest

Compound Name:	*(D)-PPA 1*
Cat. No.:	*B2397966*

Get Quote

For Researchers, Scientists, and Drug Development Professionals

This guide provides a comparative analysis of the D-peptide antagonist, **(D)-PPA 1**, focusing on its interaction with the immune checkpoint protein PD-L1 and exploring the critical aspect of its cross-reactivity with other key immune checkpoint proteins. While direct experimental data on the cross-reactivity of **(D)-PPA 1** is not extensively available in the public domain, this guide aims to provide a framework for understanding its known specificity and the importance of evaluating off-target interactions.

Quantitative Data Summary

(D)-PPA 1 is a D-peptide antagonist designed to block the interaction between Programmed Death-Ligand 1 (PD-L1) and its receptor, Programmed Death-1 (PD-1). This interaction is a crucial pathway that tumors exploit to evade the immune system. The binding affinity of **(D)-PPA 1** to its intended target, PD-L1, has been quantitatively determined.

Compound	Target Protein	Binding Affinity (Kd)
(D)-PPA 1	Human PD-L1	0.51 μM

© 2026 BenchChem. All rights reserved.

Note: Data regarding the binding affinity of **(D)-PPA 1** to other immune checkpoint proteins such as CTLA-4, LAG-3, and TIM-3 are not available in published literature. The specificity of D-peptides, derived from mirror-image phage display, is generally considered to be high due to the nature of the selection process. However, empirical testing is essential to confirm the lack of off-target binding.

Experimental Protocols

The binding affinity of **(D)-PPA 1** to PD-L1 was determined using Surface Plasmon Resonance (SPR). Below is a representative protocol based on standard SPR methodologies for peptide-protein interaction analysis.

Objective: To measure the binding kinetics and affinity of **(D)-PPA 1** to immobilized human PD-L1.

Materials:

- Biacore instrument (e.g., Biacore X100)
- CM5 sensor chip
- Amine coupling kit (containing N-hydroxysuccinimide (NHS), 1-ethyl-3-(3-dimethylaminopropyl)carbodiimide hydrochloride (EDC), and ethanolamine-HCl)
- Recombinant human PD-L1 protein
- **(D)-PPA 1** peptide
- Running buffer (e.g., HBS-EP+ buffer: 0.01 M HEPES pH 7.4, 0.15 M NaCl, 3 mM EDTA, 0.005% v/v Surfactant P20)
- Immobilization buffer (e.g., 10 mM sodium acetate, pH 4.5)
- Regeneration solution (e.g., 10 mM glycine-HCl, pH 2.5)

Procedure:

- Sensor Chip Preparation and Ligand Immobilization:

© 2026 BenchChem. All rights reserved.

1. Equilibrate the CM5 sensor chip with running buffer.
2. Activate the carboxyl groups on the sensor surface by injecting a 1:1 mixture of 0.4 M EDC and 0.1 M NHS for 7 minutes.
3. Inject a solution of recombinant human PD-L1 (e.g., 20 µg/mL in immobilization buffer) over the activated surface to achieve the desired immobilization level (typically 2000-3000 Resonance Units, RU).
4. Deactivate any remaining active esters by injecting 1 M ethanolamine-HCl for 7 minutes.
5. A reference flow cell is prepared similarly but without the injection of PD-L1 to serve as a negative control.

- Binding Analysis:

1. Prepare a series of dilutions of **(D)-PPA 1** in running buffer (e.g., ranging from 0.1 µM to 10 µM).
2. Inject the **(D)-PPA 1** solutions over the PD-L1-immobilized and reference flow cells at a constant flow rate (e.g., 30 µL/min) for a set association time (e.g., 180 seconds), followed by a dissociation phase with running buffer (e.g., 300 seconds).
3. After each binding cycle, regenerate the sensor surface by injecting the regeneration solution to remove any bound analyte.

- Data Analysis:

1. The sensorgrams from the reference flow cell are subtracted from the active flow cell to correct for bulk refractive index changes and non-specific binding.
2. The resulting sensorgrams are analyzed using a suitable binding model (e.g., 1:1 Langmuir binding model) to determine the association rate constant (ka), dissociation rate constant (kd), and the equilibrium dissociation constant (Kd = kd/ka).

Signaling Pathway Visualizations

© 2026 BenchChem. All rights reserved.

Understanding the signaling pathways of various immune checkpoint proteins is crucial to appreciate the potential consequences of cross-reactivity. The following diagrams illustrate the key signaling events associated with PD-1/PD-L1 and other major immune checkpoint proteins.

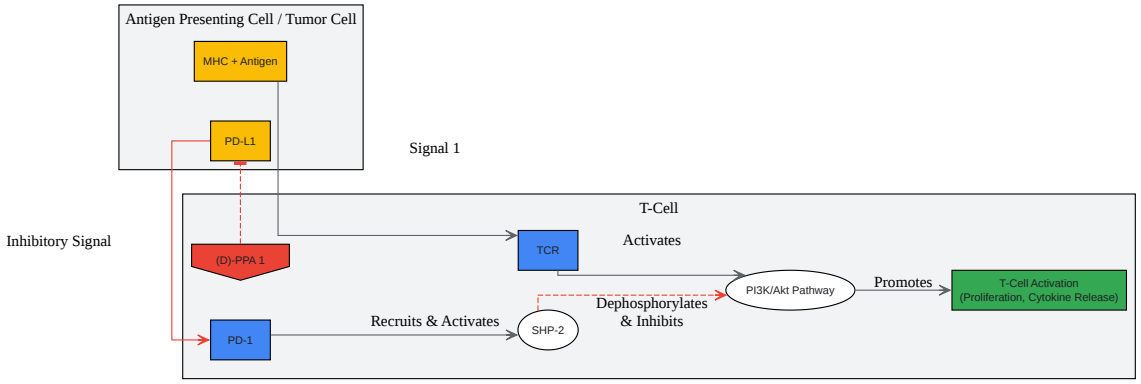

Click to download full resolution via product page

Caption: PD-1/PD-L1 signaling pathway and the inhibitory action of **(D)-PPA 1**.

© 2026 BenchChem. All rights reserved.

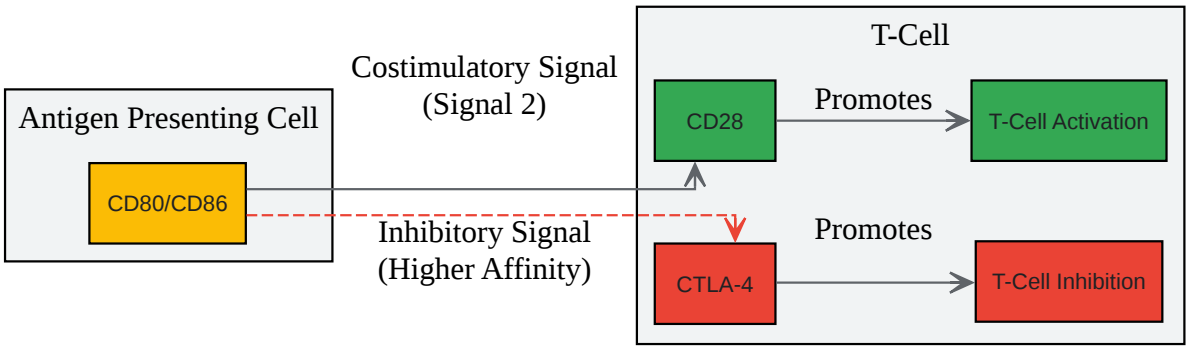

Click to download full resolution via product page

Caption: CTLA-4 signaling pathway, a key negative regulator of T-cell activation.

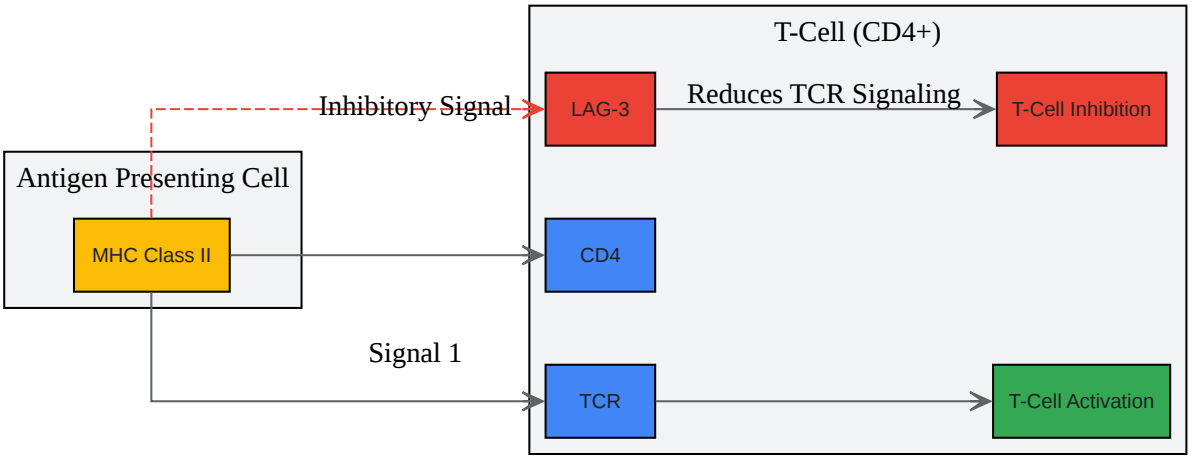

Click to download full resolution via product page

Caption: LAG-3 signaling pathway, which negatively regulates T-cell function.

© 2026 BenchChem. All rights reserved.

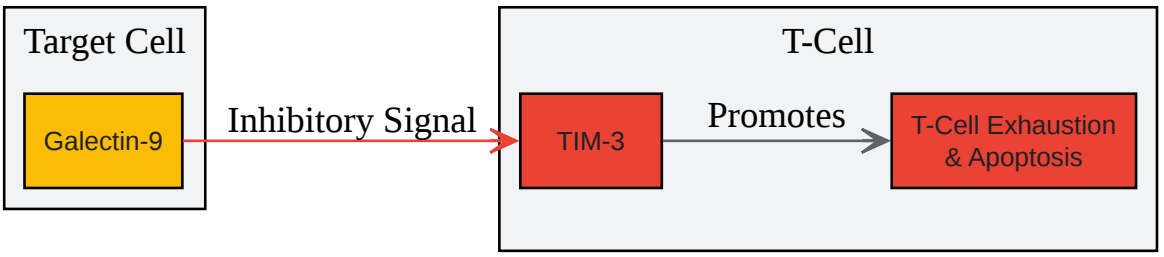

Click to download full resolution via product page

Caption: TIM-3 signaling pathway, associated with T-cell exhaustion.

Discussion on Cross-Reactivity

The high specificity of therapeutic agents is paramount to ensure efficacy and minimize off-target effects, which can lead to unforeseen toxicities. For peptide-based inhibitors like **(D)-PPA 1**, specificity is largely determined by the complementary shapes and chemical properties of the peptide and its target protein.

While D-peptides developed through mirror-image phage display are designed for high-affinity and specific binding to their intended targets, the potential for cross-reactivity with other structurally related proteins, such as other immune checkpoint molecules, cannot be entirely dismissed without empirical evidence. Immune checkpoint proteins, although functionally distinct, can share some structural motifs.

Implications for Drug Development:

- Efficacy: Cross-reactivity with other inhibitory receptors could potentially enhance the immunosuppressive blockade, but this would be an uncontrolled effect. Conversely, binding to activating receptors could counteract the intended therapeutic outcome.
- Safety and Toxicity: Off-target binding can lead to immune-related adverse events (irAEs) by disrupting the function of other crucial immune regulatory pathways.
- Mechanism of Action: A thorough understanding of a drug candidate's binding profile is essential for elucidating its true mechanism of action.

Future Directions:

© 2026 BenchChem. All rights reserved.

To fully characterize the specificity profile of **(D)-PPA 1**, comprehensive cross-reactivity studies are warranted. A recommended approach would involve screening **(D)-PPA 1** against a panel of key immune checkpoint proteins, including but not limited to:

- CTLA-4
- LAG-3
- TIM-3
- TIGIT
- VISTA

Techniques such as Surface Plasmon Resonance (SPR), Bio-Layer Interferometry (BLI), or ELISA-based binding assays would be suitable for these investigations. The resulting data would provide a direct comparison of binding affinities and a clearer picture of the selectivity of **(D)-PPA 1**, thereby strengthening its profile as a potential therapeutic candidate.

In conclusion, while **(D)-PPA 1** is a promising PD-L1 specific inhibitor, a comprehensive evaluation of its cross-reactivity with other immune checkpoint proteins is a critical next step in its preclinical development to ensure its safety and efficacy.

- To cite this document: BenchChem. [(D)-PPA 1: A Comparative Analysis of Immune Checkpoint Protein Cross-Reactivity]. BenchChem, [2026]. [Online PDF]. Available at: [https://www.benchchem.com/product/b2397966/docs#d-ppa-1-a-comparative-analysis-of-immune-checkpoint-protein-cross-reactivity]

Disclaimer & Data Validity:

The information provided in this document is for Research Use Only (RUO) and is strictly not intended for diagnostic or therapeutic procedures. While BenchChem strives to provide accurate protocols, we make no warranties, express or implied, regarding the fitness of this product for every specific experimental setup.

Technical Support: The protocols provided are for reference purposes. Unsure if this reagent suits your experiment?

© 2026 BenchChem. All rights reserved.

Need Industrial/Bulk Grade? Request Custom Synthesis Quote

BenchChem

Our mission is to be the trusted global source of essential and advanced chemicals, empowering scientists and researchers to drive progress in science and industry.

Contact

Address: 3281 E Guasti Rd

Ontario, CA 91761, United States

Phone: (601) 213-4426

Email: info@benchchem.com

Contact our Ph.D. Support Team for a compatibility check

© 2026 BenchChem. All rights reserved.