Preamble: From Serendipity to a Privileged Scaffold

Author: BenchChem Technical Support Team. **Date**: April 2026

Compound of Interest

Compound Name:	*1-(3-Methoxybenzoyl)-1,4-diazepane*
CAS No.:	*926218-37-3*
Cat. No.:	*B2358723*

Get Quote

The seven-membered heterocyclic system of 1,4-diazepine is a cornerstone of modern medicinal chemistry. Its derivatives, particularly the benzodiazepines, represent one of the most significant classes of therapeutic agents ever developed, with profound impacts on the treatment of anxiety, insomnia, seizures, and muscle spasms.[1][2][3][4] This guide provides a technical narrative of the 1,4-diazepine scaffold, tracing its origins from a fortuitous laboratory observation to the sophisticated and diverse synthetic strategies employed by researchers today. We will explore the causal chemistry behind key synthetic evolutions, detail foundational experimental protocols, and provide a forward-looking perspective on this enduringly important molecular framework.

Part 1: The Accidental Breakthrough: Leo Sternbach and the Genesis of Benzodiazepines

The story of the 1,4-diazepine class of drugs begins not with a rational design, but with a serendipitous discovery in the laboratories of Hoffmann-La Roche in the mid-1950s.[5][6][7] The research climate was focused on finding safer alternatives to barbiturates for tranquilizing

© 2026 BenchChem. All rights reserved.

effects.[5][8] Dr. Leo Sternbach, a chemist at Roche, was tasked with exploring new chemical entities for this purpose.[8][9]

His initial work, started years earlier, focused on a class of compounds known as quinazoline-3-oxides, which had been set aside as inactive and uninteresting.[7] In 1957, during a lab cleanup, a previously synthesized set of these compounds was revisited for biological screening almost as an afterthought. One compound, when treated with the primary amine methylamine, yielded an unexpected product that demonstrated potent tranquilizing, sedative, and muscle-relaxant properties in animal models.[7]

Chemical analysis revealed that the reaction had not proceeded as expected. Instead of a simple substitution on the quinazoline ring, a molecular rearrangement had occurred. The six-membered quinazoline ring had undergone an expansion, incorporating the nitrogen from the methylamine to form a seven-membered 1,4-diazepine ring system.[7] This unexpected product was chlordiazepoxide, which would later be marketed as Librium®, the first-ever benzodiazepine drug.[5][6][10][11]

The Inaugural Synthesis: From 2-Aminobenzophenone to Chlordiazepoxide

The causality of this discovery lies in the unique reactivity of the quinazoline-N-oxide intermediate. The synthetic pathway, a landmark in pharmaceutical history, can be dissected as follows:

- Oxime Formation: The synthesis begins with 2-aminobenzophenone, which is treated with hydroxylamine to form an oxime.[7]
- Acylation: The oxime is then acylated with chloroacetyl chloride.
- Intramolecular Cyclization (Attempted): The initial intent was to induce an intramolecular cyclization to form the quinazoline-3-oxide.
- Ring Expansion (The Key Step): Treatment of the resulting chloroacetamide intermediate with methylamine did not yield the expected simple substitution product. Instead, the primary amine attacked the C-2 position of the quinazoline ring, triggering a nucleophilic addition

© 2026 BenchChem. All rights reserved.

followed by a ring-opening and subsequent re-closure. This rearrangement expanded the six-membered ring into the seven-membered 1,4-benzodiazepine-N4-oxide core.[7]

- Reduction (for Diazepam): The N-oxide functionality in chlordiazepoxide could be subsequently reduced (e.g., with PCl_3) to access other derivatives.[7] Further molecular modifications, such as methylation and removal of the N-oxide, led to the development of diazepam (Valium®) in 1963, a more potent and widely prescribed successor.[5][6][9]

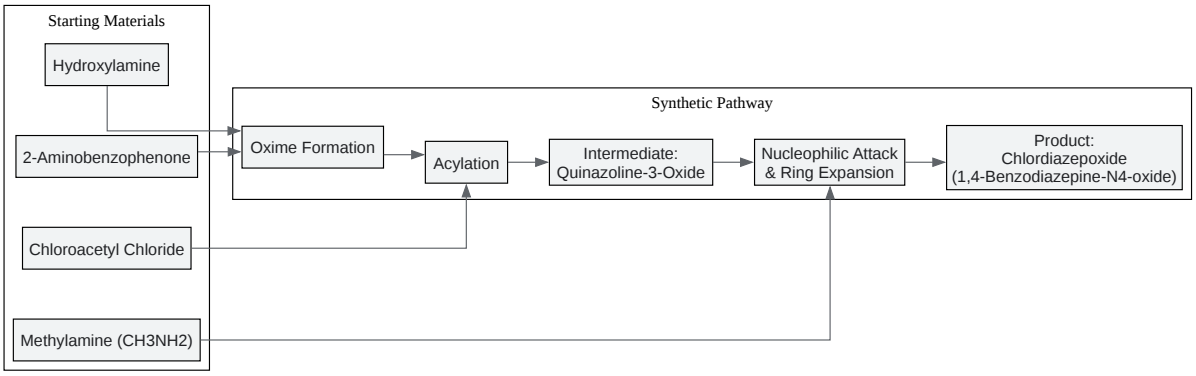

Click to download full resolution via product page

Caption: The serendipitous synthesis of Chlordiazepoxide.

Part 2: The Systematization of Synthesis: Modern Strategies for the 1,4-Diazepine Core

The groundbreaking discovery of benzodiazepines catalyzed decades of intense research, leading to the development of systematic, versatile, and efficient methods for constructing the

© 2026 BenchChem. All rights reserved.

1,4-diazepine ring. These methods can be broadly categorized into condensation reactions, intramolecular cyclizations, and multi-component strategies.

A. Condensation Reactions: The Foundational Approach

The most direct and widely employed strategy for synthesizing the 1,4-diazepine core, particularly for benzodiazepines, is the condensation of a 1,2-diamine with a 1,3-dielectrophile.[10][11] The choice of these two components dictates the final substitution pattern, making this a highly modular approach.

- Precursors: For 1,4-benzodiazepines, o-phenylenediamine (OPD) is the quintessential 1,2-diamine precursor.[10][11]
- Reaction Partners: The 1,3-dielectrophilic partner can vary widely, including:
  - α,β-Unsaturated ketones[11]
  - 1,3-Diketones[10]
  - α-Halo ketones followed by cyclization
  - α-Amino acids or their derivatives[12]

The reaction typically proceeds via the formation of a Schiff base (imine) intermediate, followed by an intramolecular nucleophilic attack by the second amine group to close the seven-membered ring.

© 2026 BenchChem. All rights reserved.

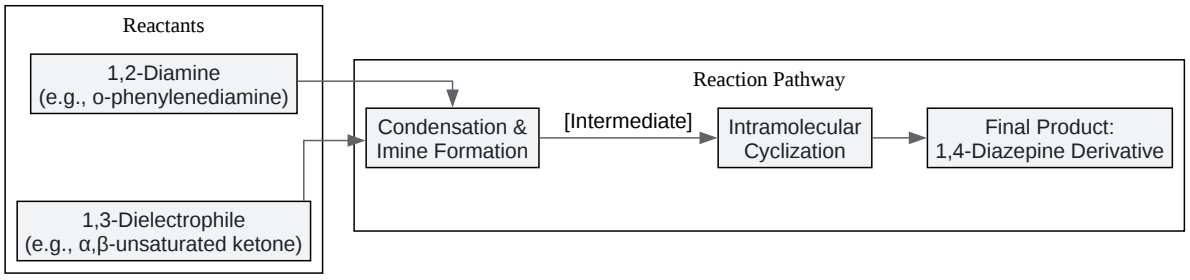

Click to download full resolution via product page

Caption: General condensation pathway for 1,4-diazepine synthesis.

The choice of catalyst is critical for efficiency and yield. A variety of catalysts have been successfully employed, demonstrating the evolution of the field towards milder and more sustainable conditions.

Catalyst Class	Specific Examples	Key Advantages	Reference
Traditional Acids/Bases	Acetic Acid, Piperidine	Cost-effective, well-established	[11]
Lewis Acids	$Yb(OTf)_3$, $Sc(OTf)_3$	High efficiency, mild conditions	N/A
Heteropolyacids (HPAs)	$H_3PW_{12}O_{40}$, $H_3PMo_{12}O_{40}$	Strong Brønsted acidity, reusable, high yields	[13]
Nanocatalysts	Fe-MCM-41-IL, Mesoporous Silica	High surface area, reusability, eco-friendly	[11]
Solvents as Catalysts	Ionic Liquids	Green solvent, can promote reaction	[11]

© 2026 BenchChem. All rights reserved.

B. Intramolecular Cyclization Strategies

An alternative to building the ring from two separate components is to construct a linear precursor containing all the necessary atoms and then induce an intramolecular ring-closing reaction. This approach offers excellent control over regioselectivity.

A prominent modern example is the use of palladium-catalyzed C-N bond formation.[12][14] In this strategy, a precursor such as an N-allyl-2-aminobenzylamine is synthesized. A palladium catalyst then facilitates the intramolecular coupling between the amine and an appropriately positioned carbon atom, forging the final C-N bond to complete the seven-membered diazepine ring.[12] This method is particularly valuable for creating complex and highly substituted diazepine derivatives.

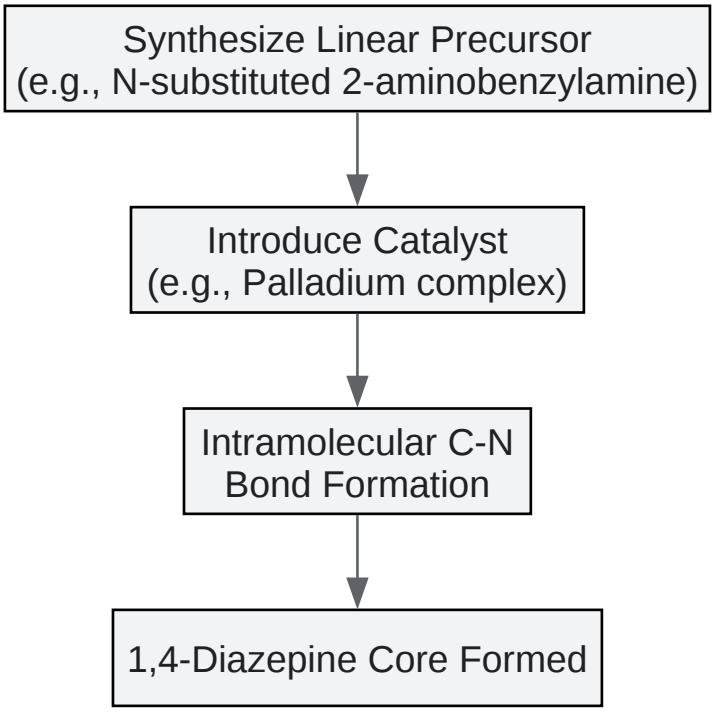

Click to download full resolution via product page

Caption: Workflow for intramolecular cyclization synthesis.

C. Multi-Component Reactions (MCRs)

Representing a paradigm of efficiency and atom economy, multi-component reactions combine three or more starting materials in a single pot to form a complex product, where most or all of

© 2026 BenchChem. All rights reserved.

the atoms from the reactants are incorporated into the final structure.[1] For 1,4-diazepine synthesis, three-component reactions have emerged as a powerful tool.

A typical example involves the reaction of o-phenylenediamine, an aromatic aldehyde, and a C-H acid like tetronic acid or dimedone, often under the influence of a nano-catalyst.[11] This one-pot procedure rapidly generates structurally diverse and complex benzodiazepine-fused systems, avoiding the need for isolating intermediates and reducing solvent waste and reaction time.

Part 3: Field-Proven Experimental Protocols

To provide a practical understanding, this section details a representative protocol for a classic condensation reaction, which serves as a self-validating system for the synthesis of a 1,5-benzodiazepine derivative, a close and often co-researched relative of the 1,4-scaffold, using the same foundational principles.

Protocol: Synthesis of a 2,4-Disubstituted-3H-1,5-Benzodiazepine

This protocol is based on the well-established condensation of o-phenylenediamine with a 1,3-diketone, a method known for its reliability and high yields.

Objective: To synthesize a 1,5-benzodiazepine derivative via acid-catalyzed condensation.

Reagents and Materials:

- o-Phenylenediamine (OPD)
- 1,3-Diketone (e.g., Acetylacetone or Dibenzoylmethane)
- Glacial Acetic Acid (as catalyst and solvent)
- Ethanol
- Ice-cold water
- Standard laboratory glassware (round-bottom flask, condenser, etc.)

© 2026 BenchChem. All rights reserved.

- Stirring and heating apparatus

Step-by-Step Methodology:

- Reactant Preparation: In a 100 mL round-bottom flask, dissolve o-phenylenediamine (10 mmol) in a mixture of glacial acetic acid (10 mL) and ethanol (15 mL). Stir until a clear solution is obtained.
- Addition of Diketone: To the stirred solution, add the 1,3-diketone (10 mmol) dropwise over 5-10 minutes. An exothermic reaction may be observed.
- Reaction Reflux: Attach a condenser to the flask and heat the reaction mixture to reflux (approximately 80-90 °C) with continuous stirring. Monitor the reaction progress using Thin Layer Chromatography (TLC). The reaction is typically complete within 2-4 hours.
- Product Isolation: After completion, allow the reaction mixture to cool to room temperature. Slowly pour the mixture into a beaker containing 100 mL of ice-cold water while stirring.
- Precipitation and Filtration: A solid precipitate of the benzodiazepine product will form. Continue stirring in the ice bath for 30 minutes to ensure complete precipitation. Collect the solid product by vacuum filtration using a Büchner funnel.
- Washing: Wash the collected solid with copious amounts of cold water to remove any residual acetic acid, followed by a small amount of cold ethanol to facilitate drying.
- Purification and Characterization: The crude product can be further purified by recrystallization from a suitable solvent (e.g., ethanol). The final structure and purity should be confirmed using modern spectroscopic techniques such as ^{1}H NMR, ^{13}C NMR, and High-Resolution Mass Spectrometry (HRMS).[12][15]

Conclusion and Future Outlook

The journey of 1,4-diazepine synthesis is a compelling narrative of how a chance discovery can blossom into a vast and sophisticated field of organic chemistry. From Leo Sternbach's prepared mind noticing an anomaly, we have progressed to an era where chemists can construct the diazepine core with remarkable precision and efficiency using a diverse toolkit of reactions.[1][11]

© 2026 BenchChem. All rights reserved.

Current and future research continues to refine these methodologies. The emphasis is increasingly on developing "green" synthetic routes that utilize non-toxic solvents, reusable catalysts, and energy-efficient conditions like ultrasonication.[11] Furthermore, the development of asymmetric syntheses to access specific enantiomers of chiral 1,4-diazepines is a key frontier, as the biological activity of these molecules is often stereospecific. The 1,4-diazepine scaffold, born from serendipity, remains a privileged and dynamic structure, promising new therapeutic breakthroughs for years to come.[1][3][4][16]

References

- Rashid, M. A., Ashraf, A., Rehman, S. S., Shahid, S. A., Mahmood, A., & Faruq, M. (2019). 1,4-Diazepines: A Review on Synthesis, Reactions and Biological Significance. Current Organic Synthesis, 16(5), 709–729.
- Bentham Science Publishers. (2019). 1,4-Diazepines: A Review on Synthesis, Reactions and Biological Significance. Current Organic Synthesis.
- National Inventors Hall of Fame. (2025). NIHF Inductee Leo Sternbach and Benzodiazepines Drugs. Available from: [Link]
- Psychology Today. (2020). Benzodiazepines: The Accidental Tranquilizers. Available from: [Link]
- Ban, T. A. (2006). The history of benzodiazepines. Dialogues in Clinical Neuroscience, 8(1), 117–120. Available from: [Link]
- Rashid, M. A., et al. (2019). 1,4-Diazepines: A Review on Synthesis, Reactions and Biological Significance. PubMed. Available from: [Link]
- Grilly, D. M., & Salamone, J. D. (2012). The history of benzodiazepines. Matilda. Available from: [Link]
- Rashid, M. A., et al. (2019). 1,4-Diazepines: A Review on Synthesis, Reactions and Biological Significance. OUCI. Available from: [Link]
- Kumar, A., Sharma, G., & Sharma, R. (2023). Synthetic aspects of 1,4- and 1,5-benzodiazepines using o-phenylenediamine: a study of past quinquennial. RSC Advances, 13(5), 3326–3356. Available from: [Link]

© 2026 BenchChem. All rights reserved.

- The Recovery Village. (n.d.). The History of Xanax - Who Created It, Where Was It Created & More. Available from: [Link]
- MDPI. (2025). Synthesis of Substituted 1,4-Benzodiazepines by Palladium-Catalyzed Cyclization of N-Tosyl-Disubstituted 2-Aminobenzylamines with Propargylic Carbonates. Molecules. Available from: [Link]
- Wang, Y., et al. (2015). Synthesis of 1,4-Benzodiazepines via Intramolecular C–N Bond Coupling and Ring Opening of Azetidines. Molecules, 20(7), 12756–12771. Available from: [Link]
- Heravi, M. M., et al. (2010). Synthesis of Substituted 1,4-Diazepines and 1,5-Benzodiazepines Using an Efficient Heteropolyacid-Catalyzed Procedure. Molecules, 16(1), 92–99. Available from: [Link]
- Pujol, M. D., et al. (2018). 1,4-Benzodiazepines and New Derivatives: Description, Analysis, and Organic Synthesis. IntechOpen. Available from: [Link]
- Haddadi, Z., et al. (2014). THEORETICAL STUDY OF 1, 4-DIAZEPINES SYNTHESIS: THE REACTION MECHANISM AND TAUTOMERISM IN GAS PHASE AND IN SOLUTION. International Journal of Pharmaceutical and Chemical Sciences, 3(1), 246-253. Available from: [Link]
- Rashid, M. A., et al. (2019). 1,4-Diazepines: A Review on Synthesis, Reactions and Biological Significance. Ingenta Connect. Available from: [Link]
- Kumar, A., Sharma, G., & Sharma, R. (2023). Synthetic aspects of 1,4- and 1,5-benzodiazepines using o-phenylenediamine: a study of past quinquennial. PMC. Available from: [Link]
- Zia-Ul-Haq, M., et al. (2002). Synthesis of 1,4-Diazepine Nucleosides. Turkish Journal of Chemistry, 26(6), 807-813. Available from: [Link]

Need Custom Synthesis?

BenchChem offers custom synthesis for rare earth carbides and specific isotopiclabeling.

Email: info@benchchem.com or Request Quote Online.

Sources

- 1. researchgate.net [researchgate.net]
- 2. benthamscience.com [benthamscience.com]
- 3. 1,4-Diazepines: A Review on Synthesis, Reactions and Biological Significance - PubMed [pubmed.ncbi.nlm.nih.gov]
- 4. benthamdirect.com [benthamdirect.com]
- 5. The history of benzodiazepines - PubMed [pubmed.ncbi.nlm.nih.gov]
- 6. matilda.science [matilda.science]
- 7. 1,4-Benzodiazepines and New Derivatives: Description, Analysis, and Organic Synthesis | IntechOpen [intechopen.com]
- 8. Benzodiazepines: The Accidental Tranquilizers | Psychology Today [psychologytoday.com]
- 9. invent.org [invent.org]
- 10. pubs.rsc.org [pubs.rsc.org]
- 11. Synthetic aspects of 1,4- and 1,5-benzodiazepines using o-phenylenediamine: a study of past quinquennial - PMC [pmc.ncbi.nlm.nih.gov]
- 12. Synthesis of 1,4-Benzodiazepines via Intramolecular C–N Bond Coupling and Ring Opening of Azetidines - PMC [pmc.ncbi.nlm.nih.gov]
- 13. Synthesis of Substituted 1,4-Diazepines and 1,5-Benzodiazepines Using an Efficient Heteropolyacid-Catalyzed Procedure - PMC [pmc.ncbi.nlm.nih.gov]
- 14. mdpi.com [mdpi.com]
- 15. journals.tubitak.gov.tr [journals.tubitak.gov.tr]
- 16. 1,4-Diazepines: A Review on Synthesis, Reactions and Biological Significance [ouci.dntb.gov.ua]
- To cite this document: BenchChem. [Preamble: From Serendipity to a Privileged Scaffold]. BenchChem, [2026]. [Online PDF]. Available at: [https://www.benchchem.com/product/b2358723/docs#preamble-from-serendipity-to-a-privileged-scaffold]

Disclaimer & Data Validity:

© 2026 BenchChem. All rights reserved.

The information provided in this document is for Research Use Only (RUO) and is strictly not intended for diagnostic or therapeutic procedures. While BenchChem strives to provide accurate protocols, we make no warranties, express or implied, regarding the fitness of this product for every specific experimental setup.

Technical Support: The protocols provided are for reference purposes. Unsure if this reagent suits your experiment?

Need Industrial/Bulk Grade? Request Custom Synthesis Quote

BenchChem

Our mission is to be the trusted global source of essential and advanced chemicals, empowering scientists and researchers to drive progress in science and industry.

Contact

Address: 3281 E Guasti Rd

Ontario, CA 91761, United States

Phone: (601) 213-4426

Email: info@benchchem.com

Contact our Ph.D. Support Team for a compatibility check

© 2026 BenchChem. All rights reserved.