# Technical Application Note: Optimized Sonogashira Coupling of Functionalized Pyridines

**Author**: BenchChem Technical Support Team. **Date**: March 2026

| *Compound of Interest* | | |
|---|---|---|
| *Compound Name:* | *(4-Iodo-6-methoxypyridin-3-YL)methanol* | |
| *CAS No.:* | *1266728-78-2* | |
| *Cat. No.:* | *B2355433* | *Get Quote* |

## Executive Summary & Strategic Analysis

The functionalization of the pyridine core is a cornerstone in the synthesis of kinase inhibitors and GPCR ligands. The substrate **(4-Iodo-6-methoxypyridin-3-yl)methanol** presents a unique triad of functionalities:

- C4-Iodide: Highly reactive handle for oxidative addition (favored over bromides/chlorides).
- C6-Methoxy: Electron-donating group (EDG) that renders the pyridine ring more electron-rich than bare pyridine, slightly reducing electrophilicity but suppressing non-specific nucleophilic attacks.
- C3-Hydroxymethyl ($-CH_2OH$): A protic moiety that historically required silyl protection (e.g., TBS, TBDPS).

Strategic Directive: This protocol validates a direct coupling strategy. Protecting group manipulations (protection/deprotection) add two synthetic steps and reduce overall yield. By utilizing mild organic bases and controlling copper loading, the free alcohol is tolerated, preventing alkoxide formation and catalyst poisoning.

© 2026 BenchChem. All rights reserved.

# Mechanistic Insight & Reaction Design

## The Chemoselective Challenge

The primary risk in this reaction is not the coupling itself, but the interference of the C3-alcohol and the Pyridine Nitrogen.

- Issue: The Pyridine N can coordinate to Pd(II), arresting the catalytic cycle (the "sink" effect).
- Solution: Use of $Pd(dppf)Cl_2$ or $Pd(PPh_3)_2Cl_2$. Bis-phosphine ligands increase the steric bulk around Palladium, discouraging N-coordination.
- Issue: The C3-OH can deprotonate under strong basic conditions, leading to O-alkynylation or solubility issues.
- Solution: Use of Triethylamine ($Et_3N$) or Diisopropylamine (DiPA). These bases are strong enough to deprotonate the Copper-acetylene complex but too weak to deprotonate the primary alcohol (pKa ~16).

## Reaction Pathway Visualization

The following diagram outlines the catalytic cycle tailored to this pyridine substrate, highlighting the critical "Copper Cycle" intersection.

© 2026 BenchChem. All rights reserved.

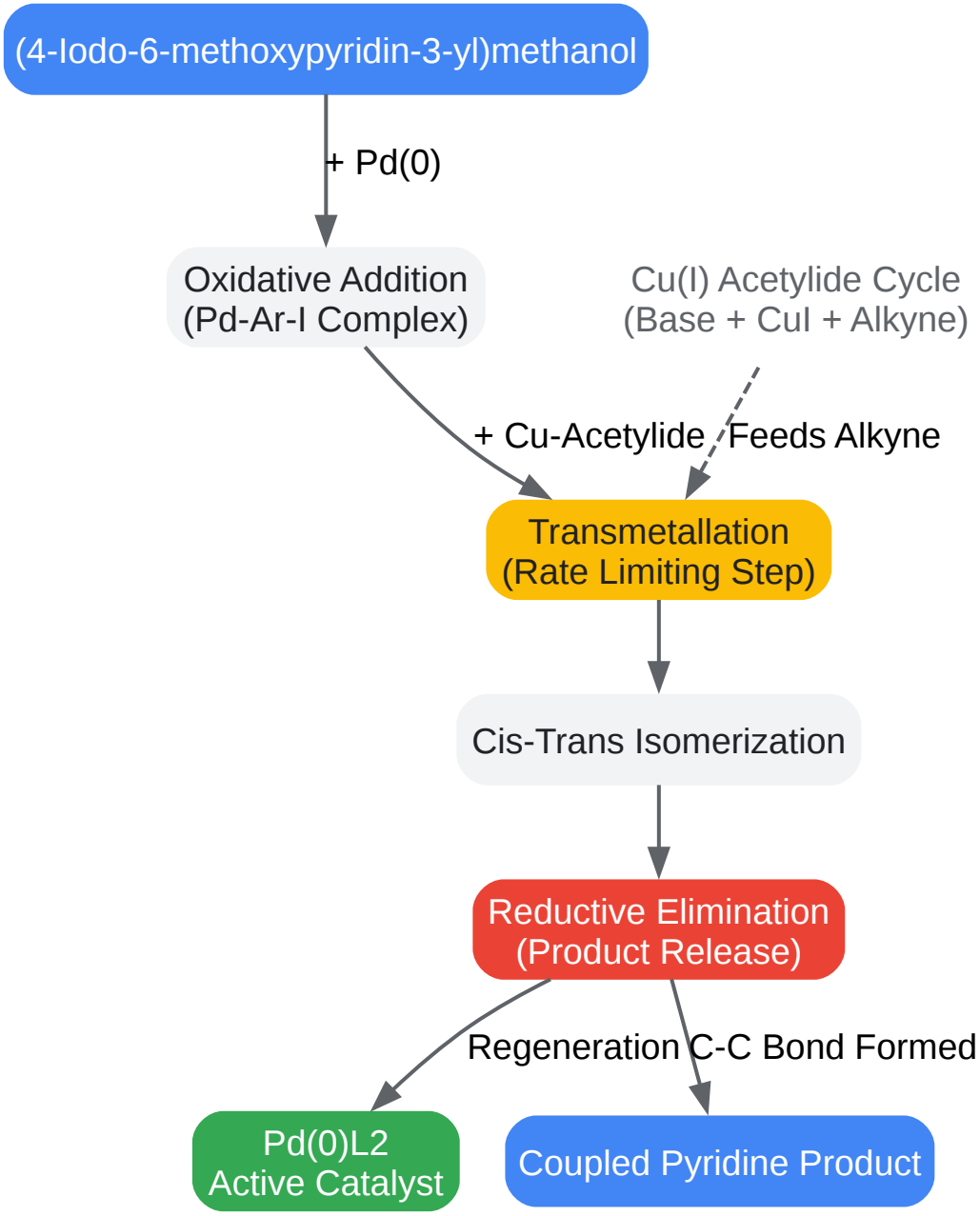


Click to download full resolution via product page

Figure 1: Catalytic cycle emphasizing the oxidative addition to the C4-iodo position and the transmetallation entry point.

# Experimental Protocol (Standard Operating Procedure)

## Materials & Reagents

© 2026 BenchChem. All rights reserved.

| Reagent | Equiv. | Role | Critical Attribute |
|---|---|---|---|
| Substrate | 1.0 | Electrophile | >98% Purity (HPLC) |
| Terminal Alkyne | 1.2 - 1.5 | Nucleophile | Volatiles must be accounted for |
| $Pd(PPh_3)_2Cl_2$ | 0.03 - 0.05 | Catalyst | Air-stable precatalyst |
| CuI | 0.05 - 0.10 | Co-Catalyst | Must be off-white (not green/oxidized) |
| $Et_3N$ | 3.0 - 5.0 | Base | Dry, amine-free grade |
| DMF or THF | Solvent | Medium | Anhydrous, degassed |

## Step-by-Step Methodology

Step 1: System Preparation (The Inert Atmosphere)

- Rationale: Oxygen promotes Glaser homocoupling (Alkyne-Alkyne dimerization), a major side reaction.
- Flame-dry a 2-neck round bottom flask equipped with a magnetic stir bar.
- Cool under a stream of Argon or Nitrogen.[1]

Step 2: Reagent Charging

- Charge the flask with **(4-Iodo-6-methoxypyridin-3-yl)methanol** (1.0 equiv), $Pd(PPh_3)_2Cl_2$ (3-5 mol%), and CuI (5-10 mol%).
- Note: Adding solids first allows for simultaneous degassing.

Step 3: Solvent & Base Addition

- Seal the flask with a rubber septum.
- Evacuate and backfill with Argon (3 cycles).[1]

© 2026 BenchChem. All rights reserved.

- Inject anhydrous DMF (Concentration: 0.1 M - 0.2 M) followed by $Et_3N$ (3.0 equiv) via syringe.
- Observation: The solution typically turns yellow/brown.

Step 4: Alkyne Addition & Reaction

- Add the Terminal Alkyne (1.2 equiv) dropwise via syringe.
- Temperature Control: Stir at Room Temperature (25°C) for 1 hour.
- Monitoring: Check LCMS/TLC. If conversion is <10% after 1 hour, heat to 50°C.
  - Why? The C4-Iodo is reactive, but the C6-OMe electron donation may require thermal activation for oxidative addition.
  - Endpoint: Reaction is usually complete in 4-12 hours.

Step 5: Workup (Copper Removal)

- Dilute the reaction mixture with Ethyl Acetate (EtOAc).
- Wash with saturated $NH_4Cl$ (aq) mixed with a small amount of $NH_4OH$ (9:1).
  - Mechanism:[2][3][4][5][6][7] Ammonia complexes Cu ions (deep blue $[Cu(NH_3)_4]^{2+}$), removing them from the organic phase.
- Wash with brine, dry over $Na_2SO_4$, filter, and concentrate.

Step 6: Purification

- Column Chromatography: Silica Gel.[6]
- Eluent: DCM/MeOH (95:5 to 90:10) or Hexanes/EtOAc (gradient).
  - Note: The free alcohol makes the product polar. Ensure the product does not streak; add 1% $Et_3N$ to the eluent if streaking occurs due to the pyridine nitrogen.

© 2026 BenchChem. All rights reserved.

# Optimization & Troubleshooting Guide

The following decision tree helps troubleshoot common failure modes.

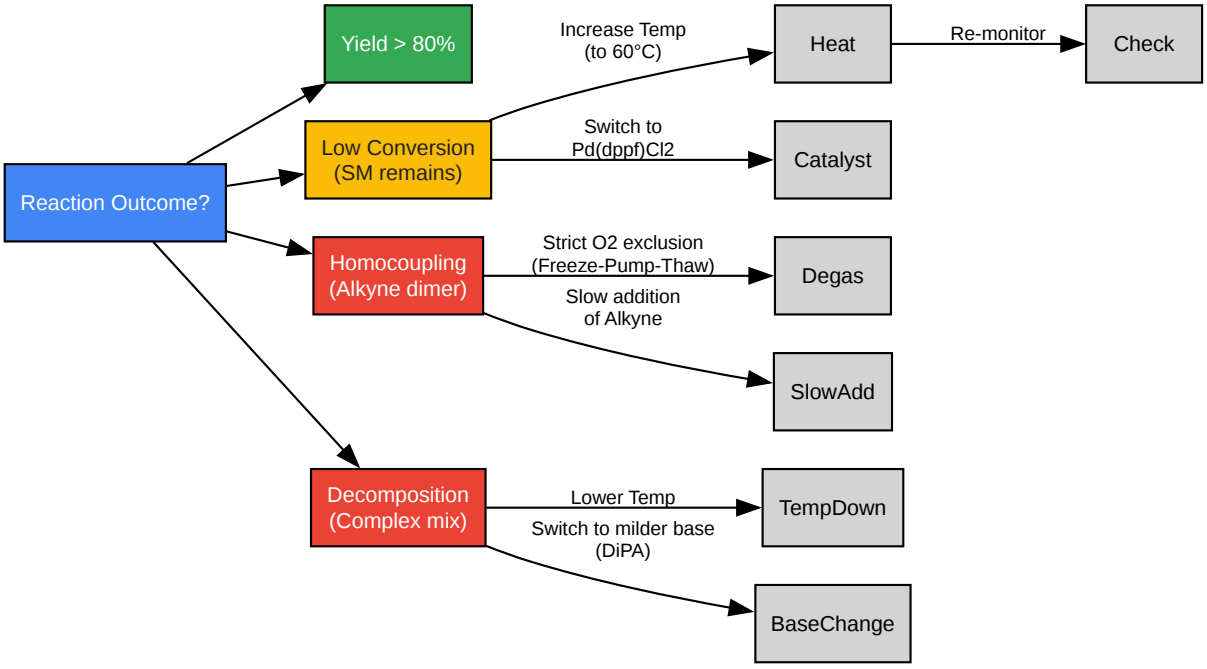


Click to download full resolution via product page

Figure 2: Workflow for troubleshooting reaction parameters based on LCMS data.

## Quantitative Comparison of Conditions

| Parameter | Standard Protocol | Optimized (Difficult Substrates) |
|---|---|---|
| Catalyst | $Pd(PPh_3)_2Cl_2$ | $Pd(dppf)Cl_2$ (Higher TOF) |
| Solvent | DMF | DMF/THF (1:1) |
| Base | $Et_3N$ | Diisopropylamine (DiPA) |
| Temp | 25°C - 50°C | 60°C - 80°C |
| Typical Yield | 75-85% | 85-95% |

© 2026 BenchChem. All rights reserved.

## Safety & Handling

- Pyridine Derivatives: Many 4-halopyridines are skin sensitizers and irritants. Handle in a fume hood.
- Heavy Metals: Pd and Cu residues must be scavenged (e.g., using SiliaMetS® Thiol) before biological testing of the final compound to avoid false positives in assays.
- Alkynes: Low molecular weight alkynes are flammable and volatile.

## References

- Chinchilla, R., & Nájera, C. (2007). The Sonogashira Reaction: A Booming Methodology in Synthetic Organic Chemistry. Chemical Reviews, 107(3), 874–922.
- Schilz, M., & Plenio, H. (2012). A Guide to Sonogashira Cross-Coupling Reactions: The Influence of Substituents in Aryl Bromides, Iodides, and Triflates. Journal of Organic Chemistry, 77(6), 2798–2807.
- Bori, I. D., et al. (2021).[8] Preparation of substituted alkoxypyridines via directed metalation and metal-halogen exchange. Arkivoc, 2021(v), 57-72.[8] (Validates stability of 4-methoxy-3-hydroxymethyl pyridine scaffold).
- Yin, L., & Liebscher, J. (2007). Carbon-Carbon Coupling Reactions Catalyzed by Heterogeneous Palladium Catalysts.[9][10][11] Chemical Reviews, 107(1), 133–173.

***Need Custom Synthesis?***

*BenchChem offers custom synthesis for rare earth carbides and specific isotopiclabeling.*

*Email: info@benchchem.com or Request Quote Online.*

## Sources

- 1. depts.washington.edu [depts.washington.edu]
- 2. researchgate.net [researchgate.net]
- 3. youtube.com [youtube.com]

- 4. Sonogashira coupling - Wikipedia [en.wikipedia.org]
- 5. nobelprize.org [nobelprize.org]
- 6. rsc.org [rsc.org]
- 7. Sonogashira Coupling [organic-chemistry.org]
- 8. pdfs.semanticscholar.org [pdfs.semanticscholar.org]
- 9. Copper-free Sonogashira cross-coupling reactions: an overview - PMC [pmc.ncbi.nlm.nih.gov]
- 10. eprints.lib.hokudai.ac.jp [eprints.lib.hokudai.ac.jp]
- 11. researchgate.net [researchgate.net]


- To cite this document: BenchChem. [Technical Application Note: Optimized Sonogashira Coupling of Functionalized Pyridines]. BenchChem, [2026]. [Online PDF]. Available at: [https://www.benchchem.com/product/b2355433#sonogashira-cross-coupling-of-4-iodo-6-methoxypyridin-3-yl-methanol]

---

**Disclaimer & Data Validity:**

The information provided in this document is for Research Use Only (RUO) and is strictly not intended for diagnostic or therapeutic procedures. While BenchChem strives to provide accurate protocols, we make no warranties, express or implied, regarding the fitness of this product for every specific experimental setup.

**Technical Support:**The protocols provided are for reference purposes. Unsure if this reagent suits your experiment? [Contact our Ph.D. Support Team for a compatibility check]

**Need Industrial/Bulk Grade?** Request Custom Synthesis Quote

# BenchChem

Our mission is to be the trusted global source of essential and advanced chemicals, empowering scientists and researchers to drive progress in science and industry.

Contact

Address: 3281 E Guasti Rd

Ontario, CA 91761, United States

Phone: (601) 213-4426

Email: info@benchchem.com

© 2026 BenchChem. All rights reserved.