A Comparative Analysis of Choline Bitartrate and Alpha-GPC for Cognitive Enhancement

Author: BenchChem Technical Support Team. **Date**: April 2026

Compound of Interest

Compound Name:	*Choline Bitartrate*
CAS No.:	*87-67-2*
Cat. No.:	*B195724*

Get Quote

For Researchers, Scientists, and Drug Development Professionals

Introduction

Choline is an essential nutrient pivotal for a myriad of physiological functions, most notably for its role as a precursor to the neurotransmitter acetylcholine, which is integral to memory, learning, and overall cognitive function. In the realm of nootropics and cognitive enhancers, various forms of choline supplements have been developed to augment acetylcholine levels in the brain. Among these, **choline bitartrate** and L-alpha-glycerylphosphorylcholine (Alpha-GPC) are two of the most prominent. This guide provides an objective, data-driven comparison of their performance, supported by experimental data, to aid researchers and drug development professionals in their evaluation of these compounds.

Mechanism of Action and Bioavailability: A Tale of Two Choline Prodrugs

The fundamental difference between **choline bitartrate** and Alpha-GPC lies in their chemical structure, which dictates their bioavailability and ability to cross the blood-brain barrier (BBB).

© 2026 BenchChem. All rights reserved.

Choline Bitartrate is a salt of choline and tartaric acid, containing approximately 41% choline by weight. While it serves as a source of choline for the body, its hydrophilic nature and ionic charge limit its passage across the BBB. Consequently, a smaller proportion of orally ingested **choline bitartrate** is available for acetylcholine synthesis in the central nervous system.

Alpha-GPC is a phospholipid containing choline and is a natural intermediate in the metabolism of phosphatidylcholine. It also contains about 40% choline by weight. Its unique structure, featuring a glycerol backbone, facilitates more efficient transport across the BBB. Upon entering the brain, Alpha-GPC is metabolized to choline and glycerophosphate, directly providing the necessary precursor for the synthesis of acetylcholine and for the composition of neuronal membranes.

Comparative Bioavailability and Plasma Choline Levels

A prospective randomized crossover study in healthy adult men compared the plasma kinetics of different choline supplements, including **choline bitartrate** and Alpha-GPC, after a single dose equivalent to 550 mg of choline. The study found no significant difference in the area-under-the-curve of plasma choline concentrations between the different supplements, indicating that both can effectively raise systemic choline levels. However, the study also noted that the time to peak plasma choline concentration was latest for phosphatidylcholine (a source of Alpha-GPC), suggesting different absorption and metabolic rates.

It is crucial to note that while systemic bioavailability may be comparable, the key differentiator for cognitive enhancement is central nervous system bioavailability, where Alpha-GPC is widely reported to have an advantage.

Quantitative Data from Clinical Trials

The efficacy of **choline bitartrate** and Alpha-GPC for cognitive enhancement has been investigated in various clinical trials. However, a direct head-to-head comparison in the same study population is lacking in the available literature. The existing data is derived from studies on different populations, which should be considered when interpreting the results.

Alpha-GPC: Evidence in Cognitive Impairment

Alpha-GPC has been extensively studied, primarily in populations experiencing cognitive decline, such as in Alzheimer's disease and vascular dementia.

© 2026 BenchChem. All rights reserved.

Table 1: Summary of Quantitative Data from Alpha-GPC Clinical Trials

Study Population	Intervention	Duration	Key Cognitive Outcome Measure	Result
Mild to moderate Alzheimer's Disease	1200 mg/day Alpha-GPC vs. Placebo	180 days	ADAS-Cog Score	Alpha-GPC group showed a mean decrease of 3.20 points (improvement), while the placebo group showed a mean increase of 2.90 points (worsening) ($P < 0.001$).
Mild to moderate dementia	1200 mg/day Alpha-GPC vs. Placebo	6 months	ADAS-Cog Score	The treated group showed a significant improvement in ADAS-Cog scores compared to placebo.
Mild Cognitive Impairment	600 mg Alpha-GPC vs. Placebo	12 weeks	ADAS-Cog Score	The Alpha-GPC group had a significantly greater decrease in ADAS-Cog score (-2.34 points) compared to the placebo group (-0.97 points) ($p < 0.048$).

© 2026 BenchChem. All rights reserved.

Choline Bitartrate: Evidence in Healthy Adults

In contrast to Alpha-GPC, the evidence for the cognitive-enhancing effects of **choline bitartrate** in healthy individuals is less robust.

Table 2: Summary of Quantitative Data from **Choline Bitartrate** Clinical Trials

Study Population	Intervention	Duration	Key Cognitive Outcome Measure	Result
Healthy, young students	2.0-2.5g Choline Bitartrate vs. Placebo	Acute (single dose)	Declarative and Working Memory Tasks	No significant improvement in memory performance was observed with choline bitartrate supplementation compared to placebo.

Experimental Protocols

Alpha-GPC in Mild to Moderate Alzheimer's Disease

A multicenter, double-blind, randomized, placebo-controlled trial was conducted to evaluate the efficacy and tolerability of choline alphoscerate (Alpha-GPC) in patients with mild to moderate Alzheimer's disease.

- Participants: 261 patients diagnosed with probable Alzheimer's disease according to NINCDS-ADRDA criteria, with a Mini-Mental State Examination (MMSE) score between 12 and 24.
- Intervention: Participants were randomly assigned to receive either 400 mg capsules of Alpha-GPC three times a day (totaling 1200 mg/day) or a matching placebo.
- Duration: 180 days.

© 2026 BenchChem. All rights reserved.

- Primary Outcome Measure: The primary efficacy endpoint was the change from baseline in the Alzheimer's Disease Assessment Scale-Cognitive subscale (ADAS-Cog) score.
- Secondary Outcome Measures: Other assessments included the MMSE, the Geriatric Depression Scale (GDS), the ADAS-Behavioral subscale (ADAS-Behav), the ADAS-Total score, and the Clinical Global Impression (CGI) scale.
- Statistical Analysis: The primary analysis of efficacy was based on the intent-to-treat population. Changes from baseline in the outcome measures were compared between the two groups using appropriate statistical tests.

Choline Bitartrate and Memory in Healthy Young Adults

A series of double-blind, placebo-controlled, crossover experiments were conducted to investigate the acute effects of **choline bitartrate** on memory in healthy, young students.

- Participants: Healthy university students with no self-reported neurological or psychiatric disorders. The number of participants varied across the three experiments (28, 26, and 40).
- Intervention: Participants received either 2.0-2.5 grams of **choline bitartrate** or a placebo in a counterbalanced order.
- Procedure: Cognitive tasks were administered approximately 60 minutes after the ingestion of the supplement.
- Cognitive Tasks:
  - Experiment 1: Visuospatial working memory task.
  - Experiment 2: Declarative picture memorization task.
  - Experiment 3: Verbal working memory task, visuospatial working memory task, and declarative picture task.
- Statistical Analysis: The effect of **choline bitartrate** on memory performance was compared to placebo using t-tests. Bayesian statistics were also employed to assess the evidence for the null hypothesis.

© 2026 BenchChem. All rights reserved.

Signaling Pathways and Experimental Workflows

Metabolic Pathways of **Choline Bitartrate** and Alpha-GPC

The following diagram illustrates the distinct metabolic pathways of **choline bitartrate** and Alpha-GPC leading to the synthesis of acetylcholine in the brain.

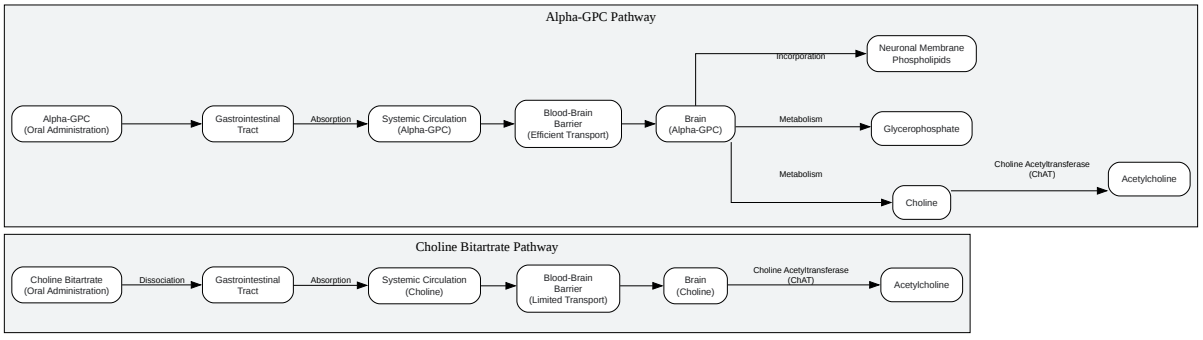

Click to download full resolution via product page

Caption: Comparative metabolic pathways of **choline bitartrate** and Alpha-GPC.

Experimental Workflow for a Cognitive Enhancement Clinical Trial

The following diagram outlines a typical experimental workflow for a randomized controlled trial investigating the effects of a choline supplement on cognitive function.

© 2026 BenchChem. All rights reserved.

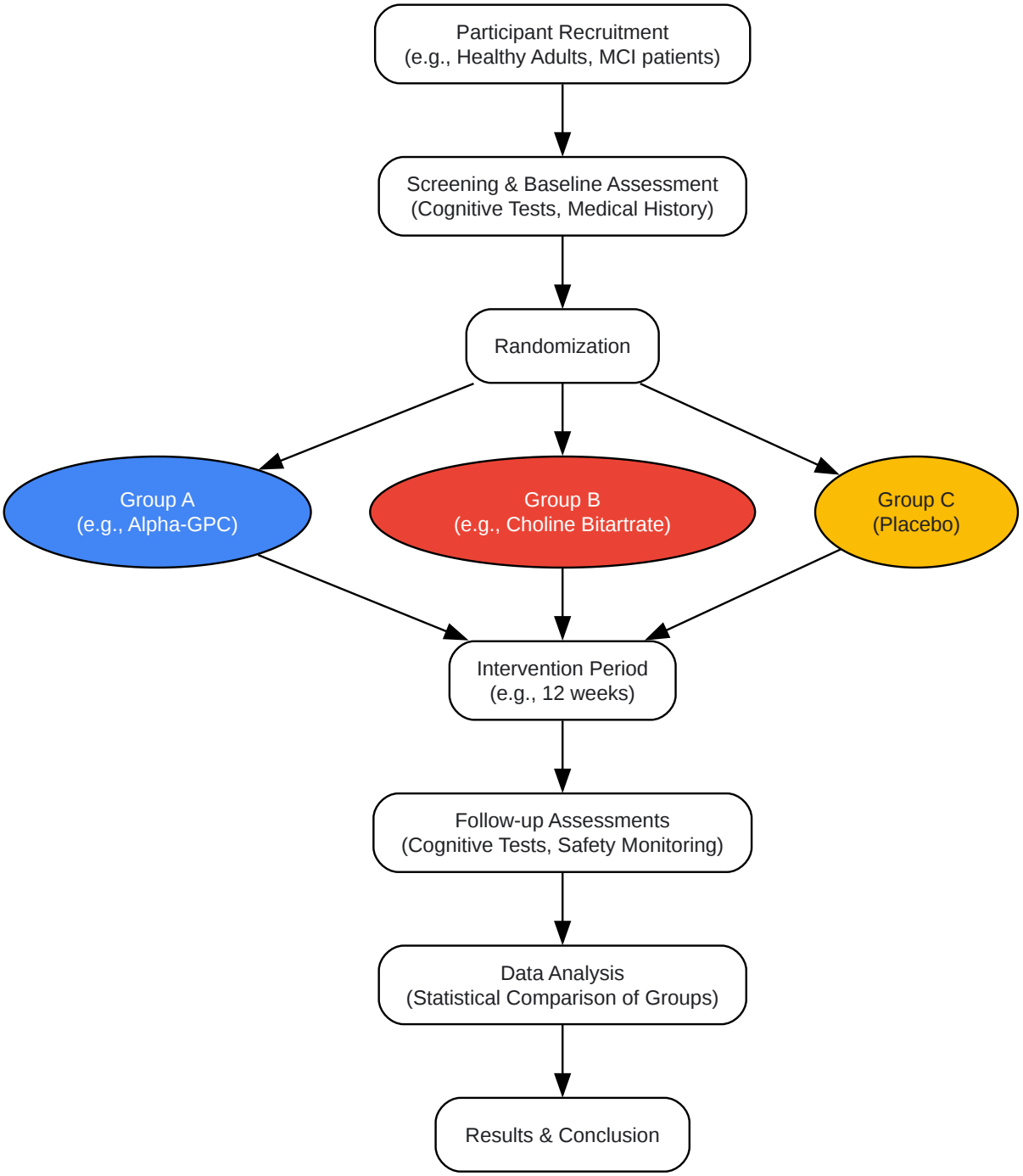

Click to download full resolution via product page

- To cite this document: BenchChem. [A Comparative Analysis of Choline Bitartrate and Alpha-GPC for Cognitive Enhancement]. BenchChem, [2026]. [Online PDF]. Available at:

© 2026 BenchChem. All rights reserved.

[https://www.benchchem.com/product/b195724/docs#a-comparative-analysis-of-choline-bitartrate-and-alpha-gpc-for-cognitive-enhancement]

Disclaimer & Data Validity:

The information provided in this document is for Research Use Only (RUO) and is strictly not intended for diagnostic or therapeutic procedures. While BenchChem strives to provide accurate protocols, we make no warranties, express or implied, regarding the fitness of this product for every specific experimental setup.

Technical Support: The protocols provided are for reference purposes. Unsure if this reagent suits your experiment?

Need Industrial/Bulk Grade? Request Custom Synthesis Quote

BenchChem

Our mission is to be the trusted global source of essential and advanced chemicals, empowering scientists and researchers to drive progress in science and industry.

Contact

Address: 3281 E Guasti Rd

Ontario, CA 91761, United States

Phone: (601) 213-4426

Email: info@benchchem.com

Contact our Ph.D. Support Team for a compatibility check

© 2026 BenchChem. All rights reserved.