comparative study of 5-Hydroxypropafenone effects on different ion channels

Author: BenchChem Technical Support Team. **Date**: May 2026

Compound of Interest

Compound Name:	*5-Hydroxypropafenone*
CAS No.:	*86384-10-3*
Cat. No.:	*B019502*

Get Quote

A Comparative Guide to the Ion Channel Effects of 5-Hydroxypropafenone

This guide provides a comprehensive comparative analysis of the effects of **5-Hydroxypropafenone**, the primary active metabolite of the antiarrhythmic drug propafenone, on various cardiac ion channels. Designed for researchers, scientists, and drug development professionals, this document delves into the nuanced interactions of this metabolite with key ion channels, supported by experimental data and detailed methodologies. Our objective is to offer an in-depth understanding of **5-Hydroxypropafenone**'s electrophysiological profile, providing a valuable resource for cardiovascular research and drug discovery.

Introduction: The Clinical Significance of a Primary Metabolite

Propafenone is a Class IC antiarrhythmic agent widely prescribed for the management of atrial and ventricular arrhythmias.[1][2] Following administration, propafenone undergoes extensive first-pass metabolism in the liver, primarily by the cytochrome P450 enzyme CYP2D6, leading

© 2026 BenchChem. All rights reserved.

to the formation of **5-Hydroxypropafenone**.[1][3] This metabolite circulates in the plasma at concentrations comparable to the parent drug and exhibits significant pharmacological activity.[1] Understanding the distinct effects of **5-Hydroxypropafenone** on cardiac ion channels is therefore crucial for a complete comprehension of propafenone's therapeutic and proarrhythmic actions.

This guide will comparatively explore the effects of **5-Hydroxypropafenone** on three major classes of cardiac ion channels: sodium (Na+), potassium (K+), and calcium (Ca2+) channels. We will examine its potency and mechanism of action at each channel, drawing comparisons with the parent compound, propafenone, to highlight key differences in their electrophysiological profiles.

Comparative Analysis of Ion Channel Blockade

The arrhythmogenic and antiarrhythmic effects of a drug are determined by its unique fingerprint of ion channel interactions. **5-Hydroxypropafenone** presents a complex profile, with varying degrees of potency across different channel subtypes.

Sodium Channel (NaV1.5) Blockade: A Potent Interaction

5-Hydroxypropafenone is a potent blocker of the cardiac sodium channel NaV1.5, which is responsible for the rapid upstroke of the cardiac action potential.[4] Multiple sources indicate that **5-Hydroxypropafenone** is a more potent Na+ channel blocker than its parent compound, propafenone.[1] This potent inhibition of the fast inward sodium current leads to a reduction in the maximum rate of depolarization (Vmax), thereby slowing conduction velocity in the atria, ventricles, and His-Purkinje system. This is a key mechanism behind its Class IC antiarrhythmic effect.[5]

The blockade of NaV1.5 by propafenone has been shown to be state-dependent, with a higher affinity for the open and inactivated states of the channel.[5] This characteristic contributes to its use-dependent effect, where the degree of block increases with heart rate. While specific kinetic studies on **5-Hydroxypropafenone**'s state-dependent binding are less detailed in the available literature, its classification as a Class IC agent suggests a similar mechanism.

Potassium Channel (K+) Modulation: A Tale of Two Channels

© 2026 BenchChem. All rights reserved.

The effects of **5-Hydroxypropafenone** on potassium channels are multifaceted, with differing potencies for the various subtypes that contribute to cardiac repolarization.

The human Ether-à-go-go-Related Gene (hERG) channel mediates the rapid delayed rectifier potassium current (IKr), which plays a critical role in the repolarization of the cardiac action potential. Blockade of hERG channels can lead to QT interval prolongation and an increased risk of life-threatening arrhythmias, such as Torsades de Pointes.

Studies have shown that **5-Hydroxypropafenone** blocks hERG channels to a similar extent as propafenone.[6] At a concentration of 2 µM, **5-Hydroxypropafenone** inhibited the hERG current by approximately 71.1%, while propafenone caused a 78.7% inhibition.[6] Both compounds exhibit a preference for binding to the open state of the hERG channel.[6] This interaction involves an acceleration of both the deactivation and inactivation processes of the channel.[6]

The hKv1.5 channel is responsible for the ultrarapid delayed rectifier potassium current (IKur), which is predominantly expressed in the atria and contributes to atrial repolarization. Inhibition of this channel can prolong the atrial action potential duration and is a target for atrial-selective antiarrhythmic drugs.

In contrast to its effects on hERG, **5-Hydroxypropafenone** is a less potent inhibitor of hKv1.5 channels compared to propafenone.[7][8] The dissociation constant (KD) for **5-Hydroxypropafenone** on hKv1.5 channels is 9.2 ± 1.6 µM, whereas for propafenone it is 4.4 ± 0.3 µM.[7][8] The block of hKv1.5 by both compounds is concentration-, voltage-, time-, and use-dependent.[7][8]

L-Type Calcium Channel (CaV1.2) Blockade: A Reduced Potency

L-type calcium channels (CaV1.2) mediate the influx of calcium that forms the plateau phase of the cardiac action potential and is essential for excitation-contraction coupling. Blockade of these channels can lead to a negative inotropic effect and a shortening of the action potential duration.

5-Hydroxypropafenone demonstrates a significantly lower potency for blocking L-type calcium channels compared to propafenone.[1] While a specific IC50 value for **5-Hydroxypropafenone**

© 2026 BenchChem. All rights reserved.

is not readily available in the reviewed literature, its characterization as being less potent than propafenone is a consistent finding.[1]

Summary of Comparative Potency

The following table summarizes the comparative effects of **5-Hydroxypropafenone** and propafenone on the key cardiac ion channels discussed.

Ion Channel	5-Hydroxypropafenone Effect	Comparative Potency vs. Propafenone	Quantitative Data (5-Hydroxypropafenone)
Sodium (NaV1.5)	Potent Blocker	More Potent[1]	Specific IC50 not available in reviewed literature.
Potassium (hERG)	Blocker	Similar[6]	~71.1% inhibition at 2 µM[6]
Potassium (hKv1.5)	Blocker	Less Potent[7][8]	KD = 9.2 ± 1.6 µM[7][8]
Calcium (CaV1.2)	Blocker	Less Potent[1]	Specific IC50 not available in reviewed literature.

Experimental Protocols: A Foundation of Trustworthiness

The data presented in this guide are derived from studies employing the whole-cell patch-clamp technique, the gold standard for characterizing ion channel electrophysiology.[5] The following provides a generalized, yet detailed, methodology that forms the basis of these findings.

Whole-Cell Patch-Clamp Electrophysiology

1. Cell Preparation:

© 2026 BenchChem. All rights reserved.

- Experiments are typically performed on mammalian cell lines (e.g., CHO, HEK293, Ltk-) stably transfected to express the specific human ion channel of interest (e.g., hNaV1.5, hERG, hKv1.5, hCaV1.2).[7][9]
- Cells are cultured under standard conditions and plated onto glass coverslips for recording.

2. Recording Solutions:

- External (Bath) Solution: Composition is designed to mimic physiological extracellular fluid. A typical solution for recording potassium currents contains (in mM): 140 NaCl, 4 KCl, 2 CaCl2, 1 MgCl2, 10 HEPES, and 10 Glucose, with the pH adjusted to 7.4 with NaOH. For sodium and calcium current recordings, specific ion channel blockers are often added to isolate the current of interest.
- Internal (Pipette) Solution: Formulated to resemble the intracellular environment. For potassium current recordings, a common solution includes (in mM): 130 KCl, 1 MgCl2, 5 EGTA, 10 HEPES, and 5 Mg-ATP, with the pH adjusted to 7.2 with KOH. For sodium and calcium currents, Cesium is often substituted for Potassium to block potassium channels.

3. Electrophysiological Recording:

- Borosilicate glass micropipettes with a resistance of 3-7 MΩ are filled with the internal solution.[10]
- A high-resistance "giga-seal" (≥1 GΩ) is formed between the micropipette tip and the cell membrane.[10]
- The cell membrane under the pipette is then ruptured by gentle suction to achieve the whole-cell configuration, allowing for electrical access to the entire cell membrane.[11]
- Cells are voltage-clamped at a specific holding potential (e.g., -80 mV) using a patch-clamp amplifier.

4. Voltage-Clamp Protocols:

- The specific voltage protocols applied are designed to elicit and characterize the currents through the ion channel of interest and to study the state-dependent block by the compound.

© 2026 BenchChem. All rights reserved.

- For NaV1.5: A typical protocol involves holding the cell at a hyperpolarized potential (e.g., -120 mV) to ensure channels are in the resting state, followed by a series of depolarizing steps to elicit the inward sodium current.
- For hERG: A common protocol involves a depolarizing step to activate the channels, followed by a repolarizing step to a negative potential to record the characteristic large tail current.[9]
- For hKv1.5: Currents are typically elicited by depolarizing voltage steps from a holding potential of -80 mV.[7]
- For CaV1.2: A holding potential of around -40 mV is often used to inactivate sodium channels, followed by depolarizing steps to activate the calcium channels.

5. Data Acquisition and Analysis:

- Currents are recorded and digitized for offline analysis.
- Concentration-response curves are generated by applying increasing concentrations of **5-Hydroxypropafenone** and measuring the resulting inhibition of the ionic current. These curves are then fitted with the Hill equation to determine the IC50 or KD value.

Visualizing the Experimental Workflow and Signaling Pathway

To better illustrate the concepts discussed, the following diagrams were generated using Graphviz.

© 2026 BenchChem. All rights reserved.

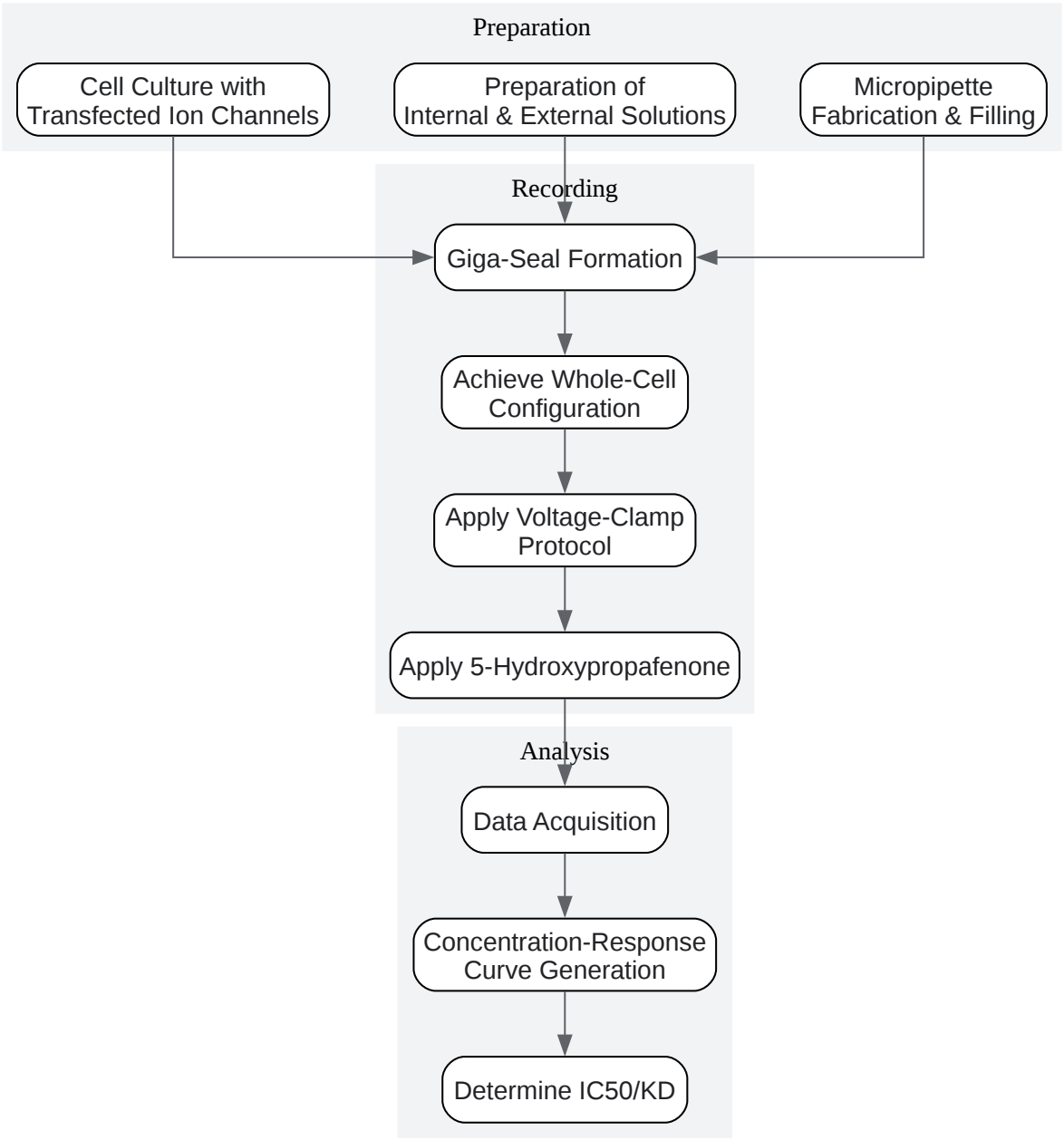

Click to download full resolution via product page

© 2026 BenchChem. All rights reserved.

Caption: A flowchart illustrating the key steps in the whole-cell patch-clamp experimental workflow.

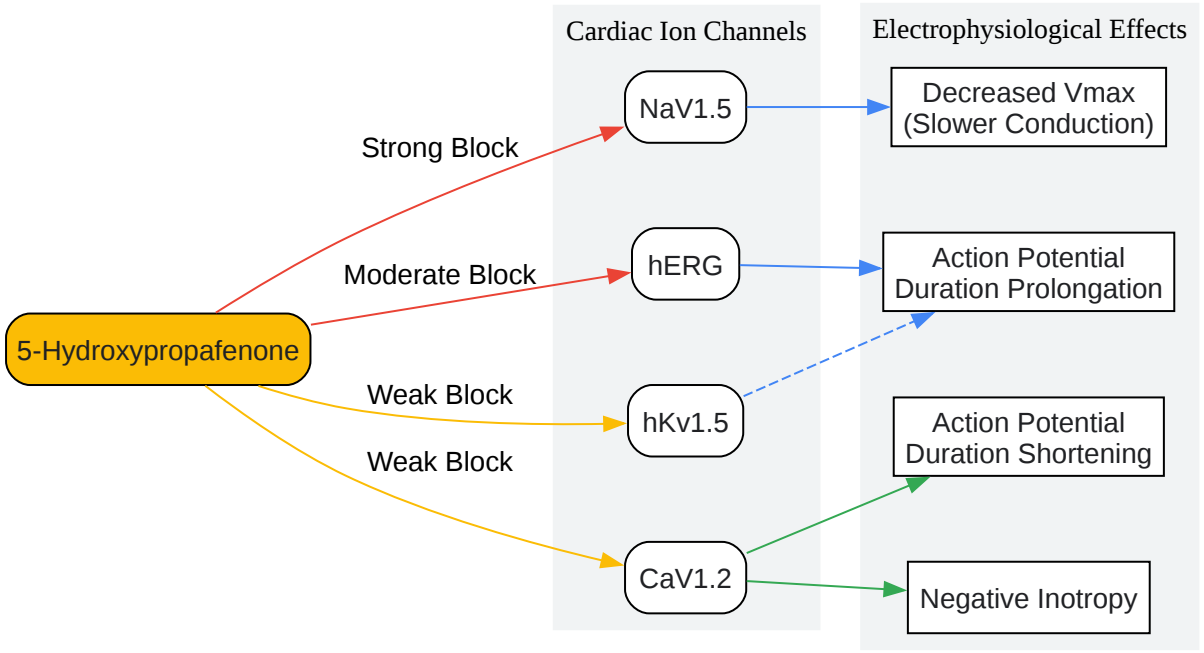

Click to download full resolution via product page

Caption: A diagram illustrating the interactions of **5-Hydroxypropafenone** with various cardiac ion channels and the resulting electrophysiological effects.

Conclusion

5-Hydroxypropafenone is a pharmacologically active metabolite that significantly contributes to the electrophysiological effects of propafenone. Its ion channel blocking profile is distinct from the parent compound, exhibiting greater potency at sodium channels and lesser potency at hKv1.5 and L-type calcium channels, while maintaining similar potency at hERG channels. This nuanced profile underscores the importance of considering the effects of active metabolites in drug development and clinical practice. A thorough understanding of these

© 2026 BenchChem. All rights reserved.

interactions, grounded in robust experimental data, is essential for predicting the clinical efficacy and safety of antiarrhythmic therapies.

References

- Axol Bioscience. (n.d.). Whole Cell Patch Clamp Protocol.
- de la Cruz, A., et al. (2003). Effects of propafenone and its main metabolite, **5-hydroxypropafenone**, on HERG channels. Cardiovascular Research, 57(3), 660-671.
- Edrich, T., Wang, S. Y., & Wang, G. K. (2005). State-dependent block of human cardiac hNav1.5 sodium channels by propafenone. Journal of Membrane Biology, 207(1), 35-43.
- Medical Genetics Summaries. (2017). Propafenone Therapy and CYP2D6 Genotype.
- Moreno, I., et al. (2003). Effects of propafenone and its main metabolite, **5-hydroxypropafenone**, on HERG channels. Cardiovascular Research, 57(3), 660-671.
- Ogden, D., & Stanfield, P. (n.d.). Patch clamp techniques for single channel and whole-cell recording.
- Reaction Biology. (2022). Cav1.2 Assay - Cardiac Safety Panel.
- Reaction Biology. (2022). Nav1.5 Assay - Cardiac Safety Panel.
- Valenzuela, C., et al. (1998). Effects of propafenone and 5-hydroxy-propafenone on hKv1.5 channels. British Journal of Pharmacology, 125(5), 969–978.
- U.S. Food and Drug Administration. (2021). Recommended voltage protocols to study drug-cardiac ion channel interactions using recombinant cell lines.
- Sophion Bioscience. (n.d.). Keep it simple – Ready-To-Use CaV1.2 cells on Qube 384.
- Sophion Bioscience. (n.d.). CHO-NaV1.5 use-dependent blockers.
- ResearchGate. (n.d.). Serum concentrations of propafenone (a) and **5-hydroxypropafenone**....
- ResearchGate. (n.d.).
- Reaction Biology. (n.d.). Nav1.5 Assay - Cardiac Safety Panel.
- Savio-Galimberti, E., & Knollmann, B. C. (2011). Efficacy and Potency of Class I Antiarrhythmic Drugs for Suppression of Ca2+ Waves in Permeabilized Myocytes Lacking Calsequestrin. Journal of Molecular and Cellular Cardiology, 51(5), 760–768.
- Chaudhary, K. W., et al. (2022). Cardiac sodium channel inhibition by lamotrigine: In vitro characterization and clinical implications.
- de la Cruz, A., et al. (2003). Effects of propafenone and its main metabolite, **5-hydroxypropafenone**, on HERG channels. Cardiovascular Research, 57(3), 660-671.
- Valenzuela, C., et al. (1998). Effects of propafenone and 5-hydroxy-propafenone on hKv1.5 channels. British Journal of Pharmacology, 125(5), 969–978.
- Moreno, I., et al. (2003). Effects of propafenone and its main metabolite, **5-hydroxypropafenone**, on HERG channels. Cardiovascular Research, 57(3), 660-671.

© 2026 BenchChem. All rights reserved.

- Medical Genetics Summaries. (2017). Propafenone Therapy and CYP2D6 Genotype.
- Valenzuela, C., et al. (1998). Effects of propafenone and 5-hydroxy-propafenone on hKv1.5 channels. British Journal of Pharmacology, 125(5), 969–978.

Need Custom Synthesis?

BenchChem offers custom synthesis for rare earth carbides and specific isotopiclabeling.

Email: info@benchchem.com or Request Quote Online.

Sources

- 1. academic.oup.com [academic.oup.com]
- 2. researchgate.net [researchgate.net]
- 3. ncbi.nlm.nih.gov [ncbi.nlm.nih.gov]
- 4. reactionbiology.com [reactionbiology.com]
- 5. State-dependent block of human cardiac hNav1.5 sodium channels by propafenone - PubMed [pubmed.ncbi.nlm.nih.gov]
- 6. Effects of propafenone and its main metabolite, 5-hydroxypropafenone, on HERG channels - PubMed [pubmed.ncbi.nlm.nih.gov]
- 7. Effects of propafenone and 5-hydroxy-propafenone on hKv1.5 channels - PubMed [pubmed.ncbi.nlm.nih.gov]
- 8. Effects of propafenone and 5-hydroxy-propafenone on hKv1.5 channels - PMC [pmc.ncbi.nlm.nih.gov]
- 9. fda.gov [fda.gov]
- 10. Propafenone Therapy and CYP2D6 Genotype - Medical Genetics Summaries - NCBI Bookshelf [ncbi.nlm.nih.gov]
- 11. researchgate.net [researchgate.net]
- To cite this document: BenchChem. [comparative study of 5-Hydroxypropafenone effects on different ion channels]. BenchChem, [2026]. [Online PDF]. Available at: [https://www.benchchem.com/product/b019502/docs#comparative-study-of-5-hydroxypropafenone-effects-on-different-ion-channels]

Disclaimer & Data Validity:

The information provided in this document is for Research Use Only (RUO) and is strictly not intended for diagnostic or therapeutic procedures. While BenchChem strives to provide accurate protocols, we make no warranties, express or implied, regarding the fitness of this product for every specific experimental setup.

Technical Support: The protocols provided are for reference purposes. Unsure if this reagent suits your experiment?

Need Industrial/Bulk Grade? Request Custom Synthesis Quote

BenchChem

Our mission is to be the trusted global source of essential and advanced chemicals, empowering scientists and researchers to drive progress in science and industry.

Contact

Address: 3281 E Guasti Rd

Ontario, CA 91761, United States

Phone: (601) 213-4426

Email: info@benchchem.com

Contact our Ph.D. Support Team for a compatibility check

© 2026 BenchChem. All rights reserved.