dealing with low labeling efficiency of 4-isothiocyanatobenzamide

Author: BenchChem Technical Support Team. **Date**: May 2026

Compound of Interest	
Compound Name:	*4-Isothiocyanatobenzamide*
CAS No.:	*158756-25-3*
Cat. No.:	*B186619*

Get Quote

Technical Support Center: 4-Isothiocyanatobenzamide Labeling

Welcome to the technical support center for **4-isothiocyanatobenzamide**. This guide is designed for researchers, scientists, and drug development professionals to navigate the challenges of using this reagent for bioconjugation. Here, you will find in-depth troubleshooting guides and frequently asked questions to address common issues and improve your labeling efficiency.

Frequently Asked Questions (FAQs)

Q1: What is **4-isothiocyanatobenzamide** and what is it used for?

4-isothiocyanatobenzamide is a chemical compound featuring an isothiocyanate group (-N=C=S) and a benzamide group. The isothiocyanate group is reactive towards primary amines, making it a useful tool for labeling proteins, peptides, and other biomolecules.[1] The benzamide functional group may be intended for further chemical modification or to modulate the properties of the labeled molecule.

© 2026 BenchChem. All rights reserved.

Q2: What is the primary reaction mechanism of **4-isothiocyanatobenzamide** with proteins?

The isothiocyanate group of **4-isothiocyanatobenzamide** reacts with nucleophilic groups on proteins, primarily the ε-amino group of lysine residues and the α-amino group at the N-terminus, to form a stable thiourea bond.[1] Under certain conditions, it can also react with other nucleophilic residues like cysteine.

Troubleshooting Guide: Low Labeling Efficiency

Low labeling efficiency is a common hurdle in bioconjugation. This section provides a structured approach to identifying and resolving the root causes of this issue.

Initial Diagnosis: Where did the reaction fail?

© 2026 BenchChem. All rights reserved.

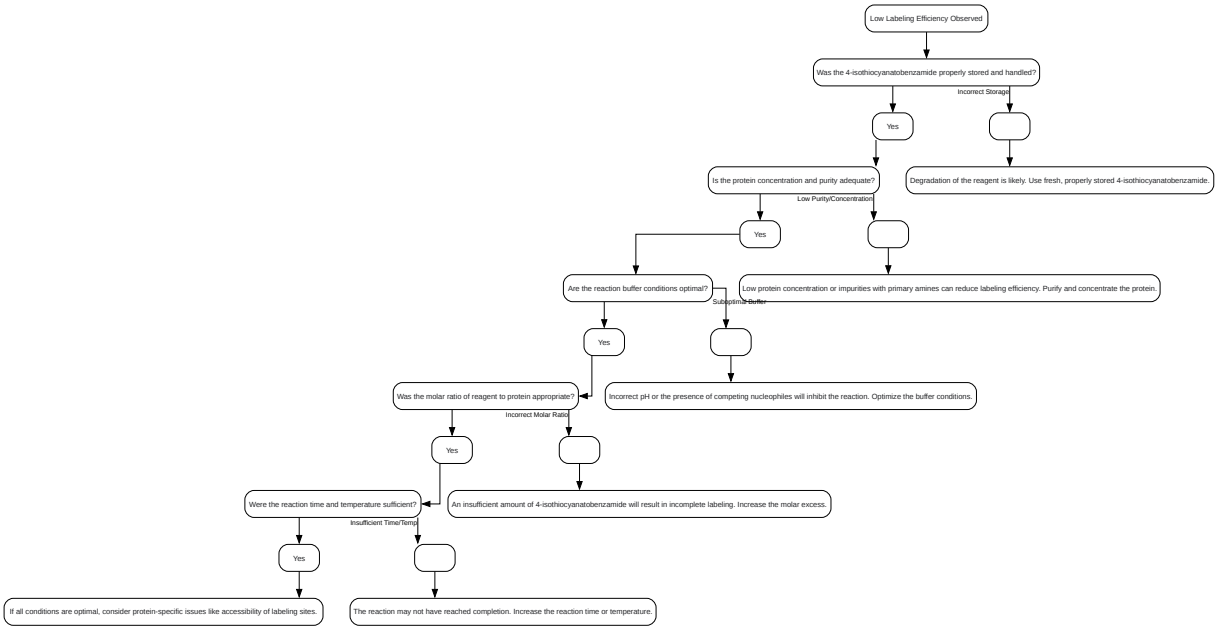

Click to download full resolution via product page

Caption: Troubleshooting workflow for low labeling efficiency.

© 2026 BenchChem. All rights reserved.

In-depth Solutions to Common Problems

Problem 1: Reagent Instability and Hydrolysis

- Causality: Isothiocyanates are susceptible to hydrolysis, especially at alkaline pH.[2][3] This side reaction consumes the reactive isothiocyanate group, rendering it unable to label the target protein. **4-isothiocyanatobenzamide** should be stored in a desiccated, dark environment to prevent degradation.
- Solution:
  - Always use a fresh stock of **4-isothiocyanatobenzamide** dissolved in an anhydrous solvent like DMSO or DMF immediately before use.
  - Minimize the exposure of the stock solution to moisture.
  - While the labeling reaction is favored at alkaline pH, be aware that the rate of hydrolysis also increases.[2][3][4] A compromise pH may be necessary.

Problem 2: Suboptimal Reaction Buffer

- Causality: The pH of the reaction buffer is critical. The primary amine groups on proteins need to be in their unprotonated, nucleophilic state to react with the isothiocyanate. This is favored at a pH above the pKa of the amino group (for lysine, the ε-amino group pKa is ~10.5). However, as mentioned, high pH also accelerates the hydrolysis of the isothiocyanate.
- Solution:
  - Perform the labeling reaction in a buffer with a pH between 8.5 and 9.5. Common choices include carbonate-bicarbonate or borate buffers.
  - Ensure the buffer is free of any primary amine-containing substances, such as Tris (tris(hydroxymethyl)aminomethane) or glycine, as these will compete with the protein for the labeling reagent.[5] If your protein is in such a buffer, perform a buffer exchange to a suitable labeling buffer like PBS (phosphate-buffered saline) adjusted to the desired pH.

© 2026 BenchChem. All rights reserved.

Parameter	Recommendation	Rationale
pH	8.5 - 9.5	Balances the need for deprotonated amines with the risk of isothiocyanate hydrolysis.
Buffer Type	Carbonate-Bicarbonate, Borate, or PBS	Provides a stable pH environment without competing primary amines.
Additives to Avoid	Tris, Glycine, Azide	These contain primary amines that will react with the isothiocyanate.

Problem 3: Protein-Specific Issues

- Causality: The structure of the target protein can influence labeling efficiency. Lysine residues may be buried within the protein's three-dimensional structure, making them inaccessible to the labeling reagent. Additionally, a low number of accessible primary amines will result in a low degree of labeling.
- Solution:
  - If possible, perform a denaturation-renaturation cycle to transiently expose buried residues. This should be done with caution as it may affect protein function.
  - Consider using a longer, more flexible linker molecule if steric hindrance is suspected to be an issue.
  - Characterize the number of accessible amines on your protein using a method like a TNBSA assay to set realistic expectations for the degree of labeling.

Experimental Protocols

General Protocol for Labeling a Protein with 4-Isothiocyanatobenzamide

© 2026 BenchChem. All rights reserved.

- Protein Preparation:
  - Dissolve the protein in a suitable labeling buffer (e.g., 0.1 M sodium carbonate-bicarbonate buffer, pH 9.0) at a concentration of 1-10 mg/mL.
  - If the protein is in an incompatible buffer, perform buffer exchange using dialysis or a desalting column.
- Reagent Preparation:
  - Immediately before use, dissolve **4-isothiocyanatobenzamide** in anhydrous DMSO or DMF to a concentration of 10 mg/mL.
- Labeling Reaction:
  - While gently vortexing the protein solution, add a 10- to 20-fold molar excess of the dissolved **4-isothiocyanatobenzamide**. The optimal ratio should be determined empirically for each protein.
  - Incubate the reaction mixture for 1-2 hours at room temperature or overnight at 4°C, protected from light.
- Purification:
  - Remove unreacted **4-isothiocyanatobenzamide** and byproducts by size-exclusion chromatography (e.g., a Sephadex G-25 column) or dialysis against a suitable storage buffer (e.g., PBS, pH 7.4).

© 2026 BenchChem. All rights reserved.

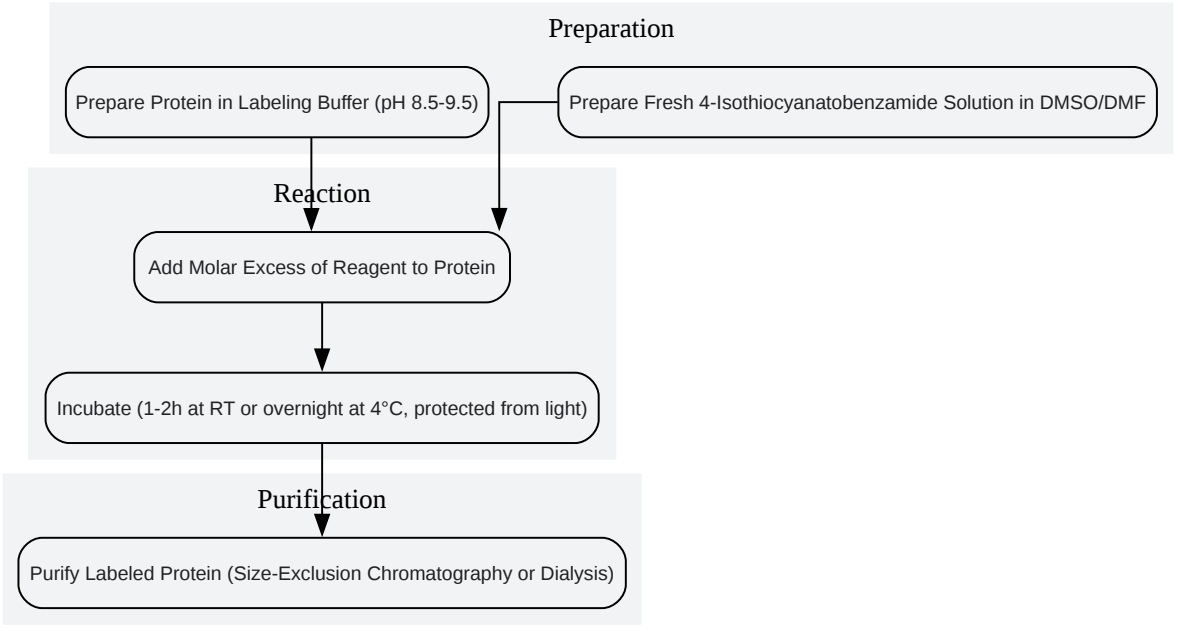

Click to download full resolution via product page

Caption: Experimental workflow for protein labeling.

Quantification of Labeling: Degree of Labeling (DOL)

To assess the efficiency of the labeling reaction, it is important to determine the average number of **4-isothiocyanatobenzamide** molecules conjugated to each protein molecule. This can be achieved using UV-Vis spectrophotometry if the absorbance spectra of the protein and the label are sufficiently distinct.

- Measure the absorbance of the labeled protein solution at 280 nm (for the protein) and at the absorbance maximum of **4-isothiocyanatobenzamide** (this needs to be determined experimentally).
- Calculate the protein concentration using the Beer-Lambert law, correcting for the absorbance of the label at 280 nm.

© 2026 BenchChem. All rights reserved.

- Calculate the concentration of the label using its molar extinction coefficient.
- The DOL is the molar ratio of the label to the protein.

Advanced Topics

Side Reactions and Byproducts

The primary side reaction of concern is the hydrolysis of the isothiocyanate group to an amine. This reaction is base-catalyzed and will compete with the desired labeling reaction. Other potential side reactions include the reaction with other nucleophilic residues like cysteine, although this is generally less favorable than reaction with primary amines under the recommended pH conditions.

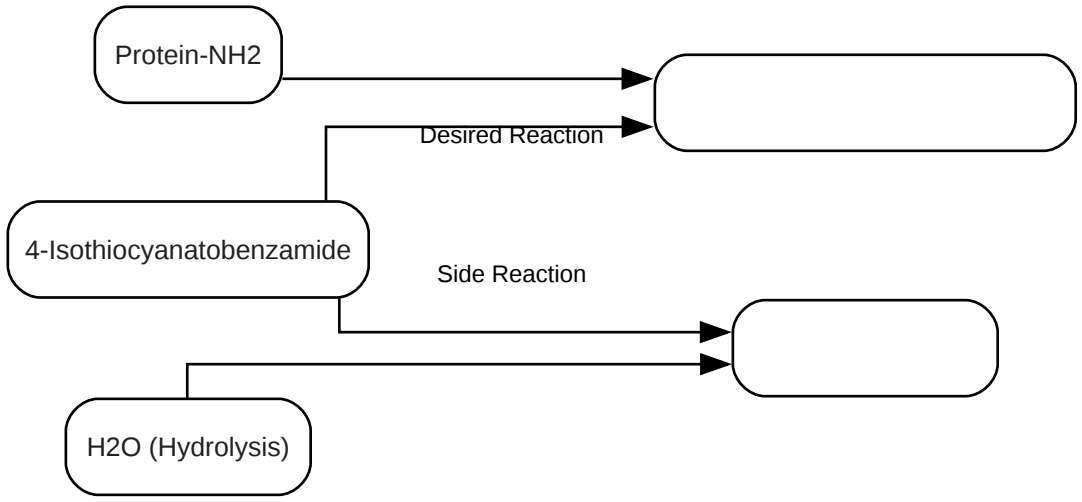

Click to download full resolution via product page

Caption: Desired reaction vs. side reaction.

By carefully controlling the reaction conditions, particularly pH and reagent purity, the formation of unwanted byproducts can be minimized, leading to a more efficient and reproducible labeling process.

References

- A Single Reactive Noncanonical Amino Acid Is Able to Dramatically Stabilize Protein Structure. ACS Chemical Biology.
- Hydrolysis Rates for Various pH Levels.

© 2026 BenchChem. All rights reserved.

- Bioconjugation.
- Labelling of proteins with 2-(4-isothiocyanatobenzyl)-1,4,7,10-tetraazacyclododecane-1,4,7,10-tetraacetic acid and lanthanides and detection by ICP-MS.
- Protein Labeling Reagents. Thermo Fisher Scientific - US.
- Troubleshooting Guides.
- Rapid hydrolysis rates of thio- and phosphate esters constrain the origin of metabolism to cool, acidic to neutral environments.
- Rapid hydrolysis rates of thio- and phosphate esters constrain the origin of metabolism to cool, acidic to neutral environments.
- Transthiocarbamoylation of Proteins by Thiolated Isothiocyanates.
- FLUORESCEIN ISOTHIOCYANATE Product Inform
- Proteins as binding targets of isothiocyanates in cancer prevention. PubMed Central.
- Comparative Investigation of the Hydrolysis of Charge-Shifting Polymers Derived from an Azlactone-based Polymer. PubMed Central.
- Antibody/Protein Labeling Kit – FITC. MedchemExpress.com.
- Utilizing a Simple Method for Stoichiometric Protein Labeling to Quantify Antibody Blockade.
- Reactivity of the isothiocyanate group with cysteine and lysine.

Need Custom Synthesis?

BenchChem offers custom synthesis for rare earth carbides and specific isotopiclabeling.

Email: info@benchchem.com or Request Quote Online.

Sources

- 1. sigmaaldrich.com [sigmaaldrich.com]
- 2. Rapid hydrolysis rates of thio- and phosphate esters constrain the origin of metabolism to cool, acidic to neutral environments - PMC [pmc.ncbi.nlm.nih.gov]
- 3. researchgate.net [researchgate.net]
- 4. researchgate.net [researchgate.net]
- 5. vectorlabs.com [vectorlabs.com]
- To cite this document: BenchChem. [dealing with low labeling efficiency of 4-isothiocyanatobenzamide]. BenchChem, [2026]. [Online PDF]. Available at: [https://www.benchchem.com/product/b186619/docs#dealing-with-low-labeling-efficiency-of-4-isothiocyanatobenzamide]

© 2026 BenchChem. All rights reserved.

Disclaimer & Data Validity:

The information provided in this document is for Research Use Only (RUO) and is strictly not intended for diagnostic or therapeutic procedures. While BenchChem strives to provide accurate protocols, we make no warranties, express or implied, regarding the fitness of this product for every specific experimental setup.

Technical Support: The protocols provided are for reference purposes. Unsure if this reagent suits your experiment?

Need Industrial/Bulk Grade? Request Custom Synthesis Quote

BenchChem

Our mission is to be the trusted global source of essential and advanced chemicals, empowering scientists and researchers to drive progress in science and industry.

Contact

Address: 3281 E Guasti Rd

Ontario, CA 91761, United States

Phone: (601) 213-4426

Email: info@benchchem.com

Contact our Ph.D. Support Team for a compatibility check

© 2026 BenchChem. All rights reserved.