Introduction: The Analytical Imperative for 2,6-Dichlorobenzylphosphonic Acid

Author: BenchChem Technical Support Team. **Date**: April 2026

Compound of Interest	
Compound Name:	*2,6-Dichlorobenzylphosphonic acid*
CAS No.:	*80395-10-4*
Cat. No.:	*B186471*

Get Quote

2,6-Dichlorobenzylphosphonic acid is an organophosphorus compound whose structural analogues are investigated in various fields, including medicinal chemistry and materials science. As with any specialized chemical entity, unambiguous structural confirmation and purity assessment are paramount for reliable research and development. Nuclear Magnetic Resonance (NMR) spectroscopy is the definitive, non-destructive technique for this purpose, providing precise information on the molecular structure, connectivity, and chemical environment of atoms.

This technical guide provides a comprehensive overview and detailed protocols for the analysis of **2,6-Dichlorobenzylphosphonic acid** using both proton (^{1}H) and phosphorus-31 (^{31}P) NMR spectroscopy. The methodologies and interpretations presented herein are designed for researchers, scientists, and drug development professionals who require a robust analytical framework for the characterization of phosphonic acids.

Understanding the Analyte: Key Physicochemical Properties

© 2026 BenchChem. All rights reserved.

The molecular structure of **2,6-Dichlorobenzylphosphonic acid** dictates its behavior in solution and, consequently, the strategy for its NMR analysis. The presence of the acidic phosphonic acid group (-P(O)(OH)$_2$) and the hydrophobic dichlorobenzyl moiety results in moderate polarity.

- Solubility: The compound is typically soluble in polar aprotic deuterated solvents like Dimethyl Sulfoxide-d$_6$ (DMSO-d$_6$) and Methanol-d$_4$ (CD$_3$OD). Solubility in Deuterium Oxide (D$_2$O) is possible, but it introduces pH (or pD) dependence that significantly affects the ^{31}P chemical shift.[1]

- Acidity and Hydrogen Bonding: The two acidic protons of the phosphonic acid group can engage in hydrogen bonding with the solvent or other analyte molecules. This is a critical consideration, as the protonation state dramatically alters the electronic environment around the phosphorus atom.[1][2] For routine structural confirmation, using a solvent like DMSO-d$_6$ provides a consistent chemical environment.

Visualizing the Molecular Structure and NMR-Active Nuclei

A clear understanding of the molecule's topology is essential before interpreting its spectra. The following diagram illustrates the distinct proton environments and the single phosphorus atom that are the focus of this analysis.

© 2026 BenchChem. All rights reserved.

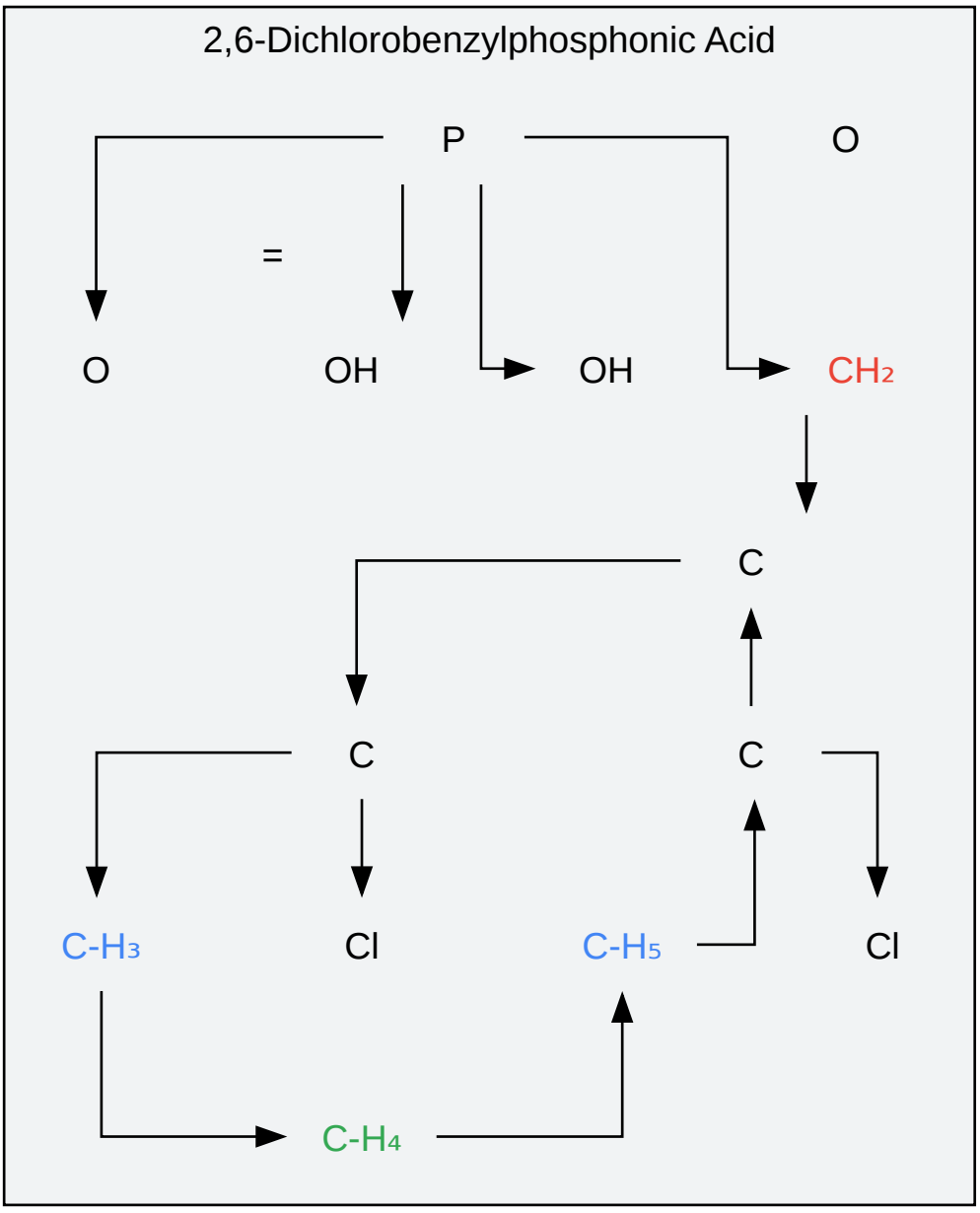

Click to download full resolution via product page

Caption: Molecular structure highlighting distinct proton (CH_2, H_3/H_5, H_4) and phosphorus environments.

Experimental Protocols: From Sample Preparation to Data Acquisition

© 2026 BenchChem. All rights reserved.

The quality of NMR data is directly dependent on meticulous sample preparation and correctly set acquisition parameters. The following protocols are designed to yield high-resolution, reproducible spectra.

Protocol 1: Sample Preparation

The choice of solvent is the most critical decision. DMSO-d_6 is recommended for routine analysis as it readily dissolves the analyte and minimizes complications from pH effects on the ^{31}P chemical shift.

- Material Weighing: In a clean, dry vial, accurately weigh 10-20 mg of **2,6-Dichlorobenzylphosphonic acid** for ^{1}H NMR, and 20-50 mg for ^{31}P NMR.[3] The higher concentration for ^{31}P NMR compensates for its lower intrinsic sensitivity compared to ^{1}H NMR.[4]
- Solubilization: Add approximately 0.7 mL of deuterated solvent (e.g., DMSO-d_6, 99.9% D) to the vial.[5]
- Dissolution: Gently agitate or vortex the vial until the solid is completely dissolved. If particulates remain, filter the solution through a small plug of glass wool in a Pasteur pipette directly into the NMR tube. Solid particles will degrade the spectral quality by interfering with the magnetic field homogeneity (shimming).[3]
- Transfer: Transfer the clear solution to a high-quality 5 mm NMR tube. Ensure the sample height is at least 50 mm (approx. 0.7 mL) to be properly centered within the instrument's detection coil.[5]
- Referencing (^{31}P NMR): For precise ^{31}P chemical shift determination, an external standard is used.[1] Place a sealed capillary tube containing 85% H_3PO_4 inside the NMR tube. This avoids direct contact of the reactive standard with the sample.[1][3]

Protocol 2: ^{1}H NMR Data Acquisition

- Instrument Setup: Insert the sample into the NMR spectrometer. Lock onto the deuterium signal of the solvent (DMSO-d_6).

© 2026 BenchChem. All rights reserved.

- Shimming: Optimize the magnetic field homogeneity by shimming on the lock signal until the peak is sharp and symmetrical.
- Acquisition Parameters:
  - Pulse Program: Standard single-pulse (zg30).
  - Spectral Width: ~12-15 ppm, centered around 6 ppm.
  - Acquisition Time: 2-3 seconds to ensure good digital resolution.
  - Relaxation Delay (d1): 2-5 seconds. A longer delay is crucial for accurate integration if quantitative analysis is needed.
  - Number of Scans: 8 to 16 scans are typically sufficient for a sample of this concentration.

Protocol 3: ^{31}P NMR Data Acquisition

- Instrument Setup: Tune the probe to the ^{31}P frequency. Use the lock and shim settings from the ^{1}H acquisition.
- Acquisition Parameters:
  - Pulse Program: Standard single-pulse with proton decoupling (zgpg30). This simplifies the spectrum to a singlet by removing all ^{1}H-^{13}P couplings, which is standard for routine analysis.[4]
  - Spectral Width: ~200 ppm, centered around 10-20 ppm. The wide range for organophosphorus compounds necessitates a broad spectral window.[4][6]
  - Acquisition Time: 1-2 seconds.
  - Relaxation Delay (d1): 5 seconds. Phosphorus nuclei can have long relaxation times, and a sufficient delay is important. For truly quantitative results, inverse-gated decoupling should be used with a delay of at least 5 times the longest T_1 of any phosphorus signal.[1][4]
  - Number of Scans: 64 to 256 scans, depending on the sample concentration.

© 2026 BenchChem. All rights reserved.

Experimental Workflow Diagram

The following workflow provides a visual summary of the analytical process.

Caption: Standard workflow for NMR analysis from sample preparation to spectral interpretation.

Spectral Interpretation: Decoding the Data

^{1}H NMR Spectrum Analysis

The ^{1}H NMR spectrum provides a fingerprint of the proton environments within the molecule.

- Aromatic Region (7.3-7.5 ppm): The benzene ring protons will appear in this region. Due to the symmetrical 2,6-dichloro substitution pattern, two distinct signals are expected:
  - H4 Proton: This proton is flanked by two identical H3/H5 protons, resulting in a triplet.
  - H3/H5 Protons: These two chemically equivalent protons are each adjacent to the H4 proton, appearing as a doublet.
- Benzylic Methylene Protons (CH_2) (~3.2-3.5 ppm): These two protons are chemically equivalent. They are adjacent to the phosphorus atom and will couple to it. This results in a characteristic doublet due to two-bond P-H coupling (^{2}JPH). The coupling constant for this interaction is typically in the range of 20-22 Hz.[7]
- Phosphonic Acid Protons (P-OH): In DMSO-d_6, these acidic protons often appear as a broad singlet at a variable chemical shift, typically downfield (>10 ppm), due to hydrogen bonding and exchange. Its integration would correspond to two protons.

^{31}P NMR Spectrum Analysis

The ^{31}P NMR spectrum provides direct information about the phosphorus center.

- Chemical Shift: For benzylphosphonic acids, the ^{31}P chemical shift is expected in the range of +15 to +25 ppm relative to 85% H_3PO_4, although this is highly solvent-dependent.[6] Electron-withdrawing chloro-substituents on the benzyl ring tend to deshield the phosphorus nucleus, potentially shifting it slightly downfield compared to the unsubstituted analogue.[1]

© 2026 BenchChem. All rights reserved.

- Multiplicity:
  - With ^{1}H Decoupling (Standard): The spectrum will show a single sharp singlet. This is the most common experiment for confirming the presence of a single phosphorus species.
  - Without ^{1}H Decoupling: The phosphorus signal will be split by the two adjacent methylene protons into a triplet (following the n+1 rule), with a coupling constant (^{2}JPH) matching that observed in the ^{1}H spectrum (~20-22 Hz).[4]

Summary of Expected NMR Data

The following table consolidates the predicted NMR parameters for **2,6-Dichlorobenzylphosphonic acid** in DMSO-d_6.

Nucleus	Signal Assignment	Predicted Chemical Shift (δ, ppm)	Multiplicity	Coupling Constant (J, Hz)	Integration
^{1}H	Aromatic H3, H5	~7.45	Doublet (d)	$^{3}JHH \approx 8$ Hz	2H
^{1}H	Aromatic H4	~7.35	Triplet (t)	$^{3}JHH \approx 8$ Hz	1H
^{1}H	Benzylic CH_2	~3.3	Doublet (d)	$^{2}JPH \approx 21$ Hz	2H
^{1}H	$P(O)(OH)_2$	>10 (Broad)	Singlet (br)	-	2H
^{31}P	$-P(O)(OH)_2$	+15 to +25	Singlet[1]	-	-

[1]With standard proton decoupling.

Conclusion

The combined application of ^{1}H and ^{31}P NMR spectroscopy provides an unequivocal and comprehensive characterization of **2,6-Dichlorobenzylphosphonic acid**. The ^{1}H NMR spectrum confirms the integrity of the dichlorobenzyl fragment and its connectivity to the phosphonic acid moiety through the distinct doublet of the benzylic protons. The ^{31}P NMR spectrum provides a direct and sensitive probe of the phosphorus chemical environment,

© 2026 BenchChem. All rights reserved.

serving as an excellent tool for purity assessment. By following the detailed protocols and interpretative guidelines presented in this document, researchers can confidently validate the structure and purity of their material, ensuring the integrity of subsequent scientific investigations.

References

- Kõllo, M., Kudrjašova, M., Kulp, M., & Aav, R. (2013). Methylphosphonic acid as a 31P-NMR standard for the quantitative determination of phosphorus in carbonated beverages. Analytical Methods, 5(15), 3719-3723. Available from: [Link]
- Mao, J., et al. (2013). A Reliable Method for Quantification of Phosphonates and Their Impurities by 31P NMR. Phosphorus, Sulfur, and Silicon and the Related Elements, 188(11), 1599-1607. Available from: [Link]
- Steffen's Chemistry Pages. (2017). 31P chemical shifts. Available from: [Link] (Note: Link is to a similar resource as original may be unavailable, content is standard chemical data).
- Iowa State University Chemical Instrumentation Facility. NMR Sample Preparation. Available from: [Link]
- Lavén, G., Kalek, M., Jezowska, M., & Stawinski, J. (2009). Preparation of Benzylphosphonates via a Palladium(0)-Catalyzed Cross-coupling of H-Phosphonate Diesters with Benzyl Halides. New Journal of Chemistry, 33(10), 2059-2062. Available from: [Link]
- NMR Service. 31 Phosphorus NMR. Available from: [Link]
- Robiette, R., et al. (2002). 31P NMR titration and relaxation parameters of phosphonic acid derivatives and α-aminophosphonates. Magnetic Resonance in Chemistry, 40(7), 481-488. Available from: [Link]
- Western University, JB Stothers NMR Facility. NMR Sample Preparation. Available from: [Link]
- Supporting Information - rsc.org. (Undated). Available from: [Link]

© 2026 BenchChem. All rights reserved.

- Supporting Information - The Royal Society of Chemistry. (Undated). Available from: [Link]
- ResearchGate. (2011). (A) 1 H-NMR and (B) 13 C-NMR spectra of Peak 2 from Fraction 6 of the DCM extract. Available from: [Link]
- Iowa State University Chemical Instrumentation Facility. NMR Coupling Constants. Available from: [Link]
- 31P NMR Chemical Shift of Phosphorous Compounds.
- Oxford Instruments. (Undated). Analysing phosphorus containing compounds using 31P Benchtop NMR: R&D and QC case studies. Available from: [Link]
- Chemistry Stack Exchange. (2024). 1H NMR of phosphonic acid. Available from: [Link]
- Slideshare. (Undated). 31-P NMR SPECTROSCOPY. Available from: [Link]
- Chemistry LibreTexts. (2014). 14.12: Coupling Constants Identify Coupled Protons. Available from: [Link]
- SpectraBase. (Undated). 2,6-Dichlorobenzyl alcohol - Optional[1H NMR] - Chemical Shifts. Available from: [Link]
- PubMed. (2019). Synthesis and Pharmacological Characterization of 2-(2,6-Dichlorophenyl)-1-((1 S,3 R)-5-(3-hydroxy-3-methylbutyl)-3-(hydroxymethyl)-1-methyl-3,4-dihydroisoquinolin-2(1 H)-yl)ethan-1-one (LY3154207), a Potent.... Available from: [Link]
- ResearchGate. (2019). Synthesis and Pharmacological Characterization of 2-(2,6-Dichlorophenyl)-1-((1S,3R)-5-(3-hydroxy-3-methylbutyl)-3-(hydroxymethyl. Available from: [Link]
- A new periodic mesoporous organosilica containing diimine-phloroglucinol, Pd(II). (Undated). Available from: [Link]
- Google Patents. (Undated). CN109553588B - Synthetic method of 2,6-dichlorobenzoxazole.
- Google Patents. (Undated). DE1277840B - Process for the preparation of 2,6-dichlorobenzoic acid and / or its anhydride.

© 2026 BenchChem. All rights reserved.

- MDPI. (2022). Stereoselective Synthesis and Anticancer Activity of 2,6-Disubstituted trans-3-Methylidenetetrahydropyran-4-ones. Available from: [Link]

Need Custom Synthesis?

BenchChem offers custom synthesis for rare earth carbides and specific isotopiclabeling.

Email: info@benchchem.com or Request Quote Online.

Sources

- 1. pdf.benchchem.com [pdf.benchchem.com]
- 2. researchgate.net [researchgate.net]
- 3. NMR Sample Preparation | Chemical Instrumentation Facility [cif.iastate.edu]
- 4. 31Phosphorus NMR [chem.ch.huji.ac.il]
- 5. publish.uwo.ca [publish.uwo.ca]
- 6. wissen.science-and-fun.de [wissen.science-and-fun.de]
- 7. rsc.org [rsc.org]
- To cite this document: BenchChem. [Introduction: The Analytical Imperative for 2,6-Dichlorobenzylphosphonic Acid]. BenchChem, [2026]. [Online PDF]. Available at: [https://www.benchchem.com/product/b186471/docs#introduction-the-analytical-imperative-for-2-6-dichlorobenzylphosphonic-acid]

Disclaimer & Data Validity:

The information provided in this document is for Research Use Only (RUO) and is strictly not intended for diagnostic or therapeutic procedures. While BenchChem strives to provide accurate protocols, we make no warranties, express or implied, regarding the fitness of this product for every specific experimental setup.

Technical Support: The protocols provided are for reference purposes. Unsure if this reagent suits your experiment?

Need Industrial/Bulk Grade? Request Custom Synthesis Quote

BenchChem

Our mission is to be the trusted global source of essential and advanced chemicals, empowering scientists and researchers to drive progress in science and industry.

Contact

Address: 3281 E Guasti Rd

Ontario, CA 91761, United States

Phone: (601) 213-4426

Email: info@benchchem.com

Contact our Ph.D. Support Team for a compatibility check

© 2026 BenchChem. All rights reserved.