Application Notes and Protocols for Microwave-Assisted Synthesis of Pyrazole Carboxylates

Author: BenchChem Technical Support Team. **Date**: May 2026

Compound of Interest

Compound Name:	*Ethyl 1-phenyl-1H-pyrazole-3-carboxylate*
CAS No.:	*115315-95-2*
Cat. No.:	*B186778*

Get Quote

For Researchers, Scientists, and Drug Development Professionals

These application notes provide a comprehensive overview and detailed protocols for the efficient synthesis of pyrazole carboxylates and related derivatives utilizing microwave irradiation. Microwave-assisted organic synthesis (MAOS) has emerged as a powerful technique in medicinal chemistry and drug discovery, offering significant advantages over conventional heating methods, including dramatically reduced reaction times, improved product yields, and enhanced reaction selectivity. Pyrazole scaffolds are a cornerstone in pharmaceutical development, present in a wide array of approved drugs, and their efficient synthesis is of paramount importance.

Synthetic Strategies for Pyrazole Carboxylate Synthesis

Several effective strategies have been developed for the synthesis of pyrazole carboxylates under microwave irradiation. The most prominent methods include:

© 2026 BenchChem. All rights reserved.

- Cyclocondensation of β-Ketoesters with Hydrazines: This is a robust and widely used one-pot approach that provides a straightforward route to pyrazolone derivatives, which can be precursors to or substituted with carboxylate groups. The reaction proceeds with high regioselectivity under solvent-free conditions.[1]

- 1,3-Dipolar Cycloaddition: This method involves the reaction of diazo compounds, such as ethyl diazoacetate, with alkynes. It is a powerful tool for constructing the pyrazole ring with a carboxylate group directly incorporated.

- Multicomponent Reactions (MCRs): MCRs offer an efficient and atom-economical approach to complex molecules in a single step. Microwave irradiation has been successfully applied to various MCRs for the synthesis of highly functionalized pyrazole derivatives.[2][3]

- Cyclization of Chalcones: The reaction of chalcones with hydrazines under microwave irradiation provides a facile route to various pyrazole derivatives.[4]

Data Presentation: Reaction Conditions and Yields

The following table summarizes quantitative data from various microwave-assisted syntheses of pyrazole carboxylates and related pyrazolone derivatives, showcasing the efficiency of this technology.

© 2026 BenchChem. All rights reserved.

Entry	Reactants	Product Type	Microwave Power (W)	Temperature (°C)	Time (min)	Solvent	Yield (%)	Reference
1	β-Ketoester, Hydrazine	Pyrazolone Derivative	420	-	10	Solvent-free	51-98	[5]
2	Ethyl acetoacetate, Phenylhydrazine	3-Methyl-1-phenyl-1H-pyrazol-5(4H)-one	180	-	4	Water	95	[6]
3	Substituted Benzaldehyde, Ethyl 2-cyanoacetate, 1,3-Dimethyl-1H-pyrazol-5-amine	Pyrazolo[3,4-b]pyridine-5-carboxylate	-	40	20	Water	up to 92	[2]
4	1,3-Diketone, Hydrazine	Pyrazole Derivative	-	115-140	9-10	Water	78-90	[3]

© 2026 BenchChem. All rights reserved.

5	Chalcone, Hydrazine Hydrate	Dihydro-1H-pyrazole	-	-	-	Ethanol	74-82	[4]
6	Phenyl Glycidyl Ether, Pyrazole	1-Phenoxy-3-(1H-pyrazol-1-yl)propan-2-ol	-	120	1	Solvent-free	73	[7]
7	Hydrazone, Vilsmeier-Haack reagent	Pyrazole-4-carbaldehyde	-	-	0.75-2	DMF	-	

Experimental Protocols

Protocol 1: One-Pot Synthesis of 4-Arylidenepyrazolone Derivatives from β-Ketoesters

This protocol is adapted from a reported efficient, one-pot, solvent-free synthesis under microwave irradiation.[5]

Materials:

- β-Ketoester (e.g., ethyl acetoacetate, 0.45 mmol)
- Substituted Hydrazine (e.g., phenylhydrazine, 0.3 mmol)
- Aromatic Aldehyde (0.3 mmol)

© 2026 BenchChem. All rights reserved.

- Microwave reactor vials

Procedure:

- In a dedicated microwave process vial, combine the β-ketoester (1.5 equivalents), substituted hydrazine (1 equivalent), and the aromatic aldehyde (1 equivalent).
- Seal the vial tightly with a Teflon septum.
- Place the vial into a single-mode microwave reactor.
- Irradiate the mixture at 420 W for 10 minutes.
- After the reaction is complete, allow the vial to cool to room temperature.
- The solid product obtained is then triturated with ethyl acetate and collected by suction filtration.
- Further purification can be achieved by recrystallization if necessary.

Protocol 2: Multicomponent Synthesis of Pyrazol-5-ol Derivatives

This protocol is based on a sustainable and rapid microwave-assisted multicomponent reaction using a graphene oxide catalyst.[6]

Materials:

- Substituted Nitrostyrene (1 equivalent)
- Hydrazine Hydrate or Phenylhydrazine (1 equivalent)
- Ethyl Acetoacetate (1 equivalent)
- Graphene Oxide (GO) (0.05 wt%)
- Water

© 2026 BenchChem. All rights reserved.

- Microwave reactor vials

Procedure:

- To a microwave process vial, add the substituted nitrostyrene, hydrazine hydrate (or phenylhydrazine), ethyl acetoacetate, and graphene oxide catalyst.
- Add water as the solvent.
- Seal the vial and place it in the microwave reactor.
- Irradiate the mixture at 180 W for 3-5 minutes.
- Upon completion, cool the reaction mixture to room temperature.
- The product can be isolated by filtration and washed with water.
- The graphene oxide catalyst can be recovered and reused.

Protocol 3: Synthesis of Pyrazole Derivatives from Chalcones

This protocol describes the cyclization of chalcones with hydrazines under microwave irradiation.[4]

Materials:

- 3-(4-substituted phenyl)-1-phenylprop-2-en-1-one (Chalcone)
- Hydrazine derivative (e.g., hydrazine hydrate, phenylhydrazine)
- Ethanol
- Glacial Acetic Acid (catalytic amount)
- Microwave reactor

Procedure:

© 2026 BenchChem. All rights reserved.

- In a microwave-safe vessel, dissolve the chalcone and the hydrazine derivative in ethanol.
- Add a few drops of glacial acetic acid.
- Irradiate the mixture in a microwave oven for a period of 1-5 minutes (the exact time may need optimization depending on the substrates).
- Monitor the reaction progress by Thin Layer Chromatography (TLC).
- After completion, cool the reaction mixture.
- The product often precipitates out upon cooling and can be collected by filtration.
- Recrystallize the product from a suitable solvent (e.g., ethanol) to obtain the pure pyrazole derivative.

Mandatory Visualizations

The following diagrams illustrate the general workflows for the microwave-assisted synthesis of pyrazole carboxylates.

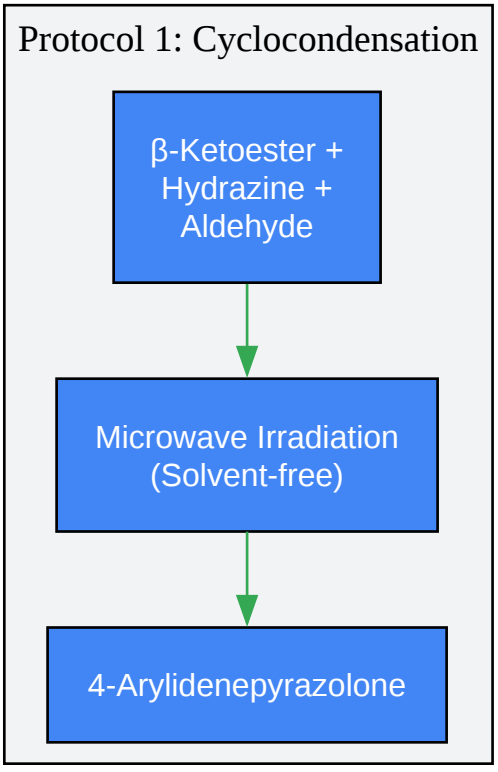

© 2026 BenchChem. All rights reserved.

Click to download full resolution via product page

Caption: Workflow for the one-pot synthesis of 4-arylidenepyrazolones.

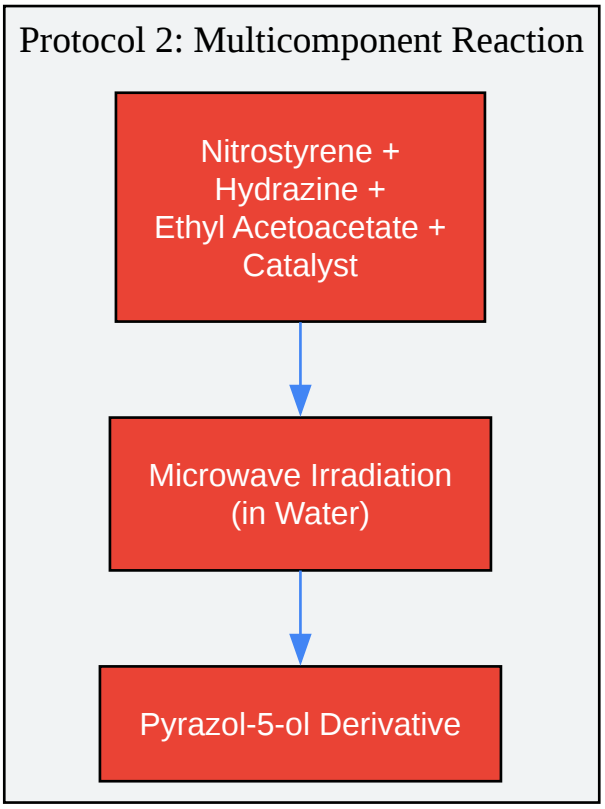

Click to download full resolution via product page

Caption: Workflow for the multicomponent synthesis of pyrazol-5-ols.

© 2026 BenchChem. All rights reserved.

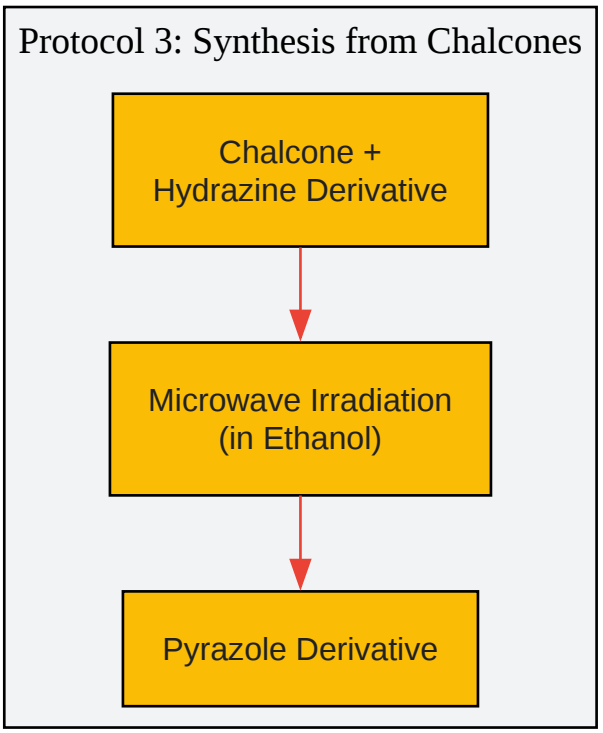

Click to download full resolution via product page

Caption: Workflow for the synthesis of pyrazoles from chalcones.

Need Custom Synthesis?

BenchChem offers custom synthesis for rare earth carbides and specific isotopiclabeling.

Email: info@benchchem.com or Request Quote Online.

References

- 1. scielo.br [scielo.br]
- 2. researchgate.net [researchgate.net]
- 3. mdpi.com [mdpi.com]
- 4. thepharmajournal.com [thepharmajournal.com]
- 5. Microwave-Assisted One-Pot Synthesis of Pyrazolone Derivatives under Solvent-Free Conditions - PMC [pmc.ncbi.nlm.nih.gov]

- 6. Microwave-assisted multi-component green synthesis of bioactive pyrazol-5-ol and its derivatives using graphene oxide as a recyclable catalyst: a rout ... - RSC Advances (RSC Publishing) DOI:10.1039/D5RA06014A [pubs.rsc.org]
- 7. mdpi.com [mdpi.com]
- To cite this document: BenchChem. [Application Notes and Protocols for Microwave-Assisted Synthesis of Pyrazole Carboxylates]. BenchChem, [2026]. [Online PDF]. Available at: [https://www.benchchem.com/product/b186778/docs#application-notes-and-protocols-for-microwave-assisted-synthesis-of-pyrazole-carboxylates]

Disclaimer & Data Validity:

The information provided in this document is for Research Use Only (RUO) and is strictly not intended for diagnostic or therapeutic procedures. While BenchChem strives to provide accurate protocols, we make no warranties, express or implied, regarding the fitness of this product for every specific experimental setup.

Technical Support: The protocols provided are for reference purposes. Unsure if this reagent suits your experiment?

Need Industrial/Bulk Grade? Request Custom Synthesis Quote

BenchChem

Our mission is to be the trusted global source of essential and advanced chemicals, empowering scientists and researchers to drive progress in science and industry.

Contact

Address: 3281 E Guasti Rd

Ontario, CA 91761, United States

Phone: (601) 213-4426

Email: info@benchchem.com

Contact our Ph.D. Support Team for a compatibility check

© 2026 BenchChem. All rights reserved.